06/2016

Mod: G22/6B12T-AGA

Production code: 393011 AGA (A9GCGL6C00)

Diamond
catering equipment

AGA CERTIFIED PRODUCT

Certificate Holder:	**ELECTROLUX PROFESSIONAL SPA**
ABN/ACN No. (if applicable):	**N/A**
Manufacturer:	**ELECTROLUX PROFESSIONAL SPA**
Agent (if applicable):	**Zanussi - J.L.Lennard Food Equipment Pty Ltd** **Electrolux - Tom Stoddart Pty Ltd** **Diamond – Semak Foodservice Equipment**
Type of Appliance:	**Commercial Gas Range**
Model No. & Description: *(Refer www.aga.asn.au for more details)*	**ZANUSSI, ELECTROLUX, DIAMOND** **XP/EVO Series**

ZANUSSI	ELECTROLUX	DIAMOND
Z9GCGD2S00, Z9GCGH4S00	E9GCGD2C00, E9GCGH4C00,	A9GCGD2C00, A9GCGH4C00,
Z9GCGHTCGA, Z9GCGHTCEA,	E9GCGHTCGA, E9GCGHTCEA,	A9GCGHTCGA, A9GCGHTCEA,
Z9GCGL6S00, Z9GCGLTC1A,	E9GCGL6C00, E9GCGLTC1A,	A9GCGL6C00, A9GCGLTC1A,
Z9GCGP8SGA, Z9GCGHTCGB,	E9GCGP8CGA, E9GCGHTCGB,	A9GCGP8CGA, A9GCGHTCGB,
Z9GCGD2S0M, Z9GCGH4S0M,	E9GCGD2C0M, E9GCGH4C0M,	A9GCGD2C0M, A9GCGH4C0M,
Z9GCGL6S0M, Z9GCGLTC1B,	E9GCGL6C0M, E9GCGLTC1B,	A9GCGL6C0M, A9GCGLTC1B,
Z9GCGH4SV0, Z9GCGH4SVM	E9GCGH4CV0, E9GCGH4CVM	A9GCGH4CV0, A9GCGH4CVM

Relevant Standard(s):	**AS4563-2004**
Gas Type(s):	**Natural and Propane**

This is to certify that the particular **COMMERCIAL CATERING** equipment specifically described herein and supplied to The Australian Gas Association (hereafter called the AGA) by the Certificate Holder named above has been subject to "type-testing" and assessed by the AGA to comply with the requirements of the AGA's Product Certification Scheme for Type Tested Gas Products.

This Certificate is issued on the express conditions that:

(i) The Certificate Holder undertakes to comply with the Rules Governing The AGA's Product Certification Scheme (hereafter called the Rules Governing);

(ii) The Certificate Holder undertakes to apply the AGAMark under licence or affix the AGA's Certification Badge (an image of which is endorsed hereon) to every appliance of the above-named model(s) throughout the currency of the certification;

(iii) This Certificate remains the property of the AGA; and

(iv) The AGA reserves the right to cancel this Certificate in accordance with the Rules Governing, and in such an event the Certificate Holder undertakes to surrender the Certificate and Certification Badges to the AGA upon request.

Client Manager

Certificate Authorised

Certificate first issued:	**24 August 2004**	Certificate No:	**6584**
This copy valid from:	**1 June 2016**	Refer specification issue:	**08**

This Certificate issued by The Australian Gas Association ABN 98 004 206 044

QF720/3

The Australian Gas Association

Specification

The Appliance described in this Specification

complies with the certification requirements of

The Australian Gas Association

A Company Limited by Guarantee ACN: 004 206 044

Brand Name: **ZANUSSI, ELECTROLUX, DIAMOND**

Model Designation: **XP/EVO 900 Series**

ZANUSSI	ELECTROLUX	DIAMOND
Z9GCGD2S00, Z9GCGH4S00,	E9GCGD2C00, E9GCGH4C00,	A9GCGD2C00, A9GCGH4C00,
Z9GCGHTCGA, Z9GCGHTCEA,	E9GCGHTCGA, E9GCGHTCEA,	A9GCGHTCGA, A9GCGHTCEA,
Z9GCGL6S00, Z9GCGLTC1A,	E9GCGL6C00, E9GCGLTC1A,	A9GCGL6C00, A9GCGLTC1A,
Z9GCGP8SGA, Z9GCGHTCGB,	E9GCGP8CGA, E9GCGHTCGB,	A9GCGP8CGA, A9GCGHTCGB,
Z9GCGD2S0M, Z9GCGH4S0M,	E9GCGD2C0M, E9GCGH4C0M,	A9GCGD2C0M, A9GCGH4C0M,
Z9GCGL6S0M, Z9GCGLTC1B,	E9GCGL6C0M, E9GCGLTC1B,	A9GCGL6C0M, A9GCGLTC1B,
Z9GCGH4SV0, Z9GCGH4SVM	E9GCGH4CV0, E9GCGH4CVM	A9GCGH4CV0, A9GCGH4CVM

Type of Appliance: **Commercial Gas Range**
for use with Natural and Propane Gas

Code of Compliance: **AS4563-2004**
Commercial Catering Gas Equipment

Manufacturer: **ELECTROLUX PROFESSIONAL SPA**

Agent: **Zanussi – J.L.Lennard Food Equipment Pty Ltd**
Electrolux - Tom Stoddart Pty Ltd
Diamond – Semak Foodservice Equipment

Certificate Holder: **ELECTROLUX PROFESSIONAL SPA**

Test Laboratory: **AGILITY** **AGA LABORATORY**

Report No: **511279** **R11073004**

REVISED: 1/6/2016	Addition of Diamond brand and agent

Date of Certification: **24 August 2004**

Certificate No: **6584-08**

CLIENT MANAGER: Ivan Marsic

Electrolux

XP/EVO 900 Commercial Range Specifications	
Appliance Model	**Issue Date**
_9GCGD2C00, Z9GCGD2S00, _9GCGH4C00, Z9GCGH4S00, *9GCGHTCGA, *9GCGHTCEA, _9GCGL6C00, Z9GCGL6S00, *9GCGLTC1A, _9GCGP8CGA, Z9GCGP8SGA, *9GCGHTCGB, _9GCGD2C0M, Z9GCGD2S0M, _9GCGH4C0M, Z9GCGH4S0M, _9GCGL6C0M, Z9GCGL6S0M, *9GCGLTC1B, _9GCGH4CV0, Z9GCGH4SV0, _9GCGH4CVM, Z9GCGH4SVM	20/05/2016
Note: _ stands for E: Electrolux, A: Diamond / * stands for E: Electrolux, Z: Zanussi, A: Diamond	

Appliance Photo

2 burner gas top

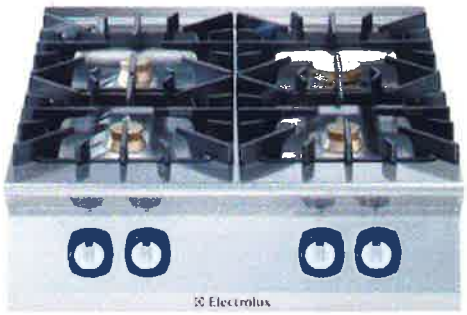

4 burner gas top

4 burner gas range + oven

6 burner gas range + oven + cupboard

Electrolux

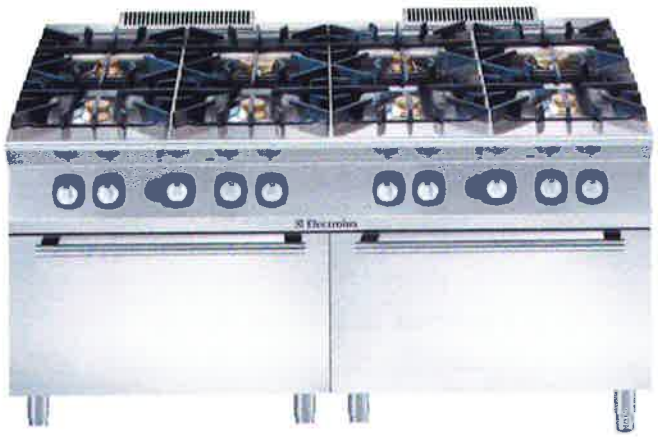

8 burner gas range + 2 ovens

4 burner gas range + convection oven

4 burner gas range (10kW) + convection oven

ZANUSSI AESTHETICS

DIAMOND AESTHETICS

ELECTROLUX PROFESSIONAL SPA
REGISTERED OFFICE
SEDE LEGALE
VIALE TREVISO, 15
33170 PORDENONE (Italy)
www.electrolux.com/professional
REGISTRO A.E.E.
N. IT050020000000533
TELEPHONE/TEL.
+39 0434.3801
TELEFAX
+39 0434.393201
R.E.A.
N. 94307
FISCAL NUMBER
REGISTER OF COMPANIES
COD. FISC. E REGISTRO
IMPRESE DI PN NUM.
00072220932
VAT CODE
P. IVA E CODICE ISO
IT 00072220932
PAID UP SHARE CAPITAL
CAPITALE SOCIALE
EURO 7.999.000 I.V.
COMPANY WITH A SOLE SHAREHOLDER
SOCIETÀ CON SOCIO UNICO
MANAGEMENT AND COORDINATION EX ART. 2497 CIVIL CODE
AB ELECTROLUX (PUBL.) - STOCKHOLM (SWEDEN)
DIREZIONE E COORDINAMENTO EX ART. 2497 CODICE CIVILE
AB ELECTROLUX (PUBL.) - STOCCOLMA (SVEZIA)

Electrolux

General Information

Name & Model Number:

DESCRIPTION	XP/EVO 900		
	ELECTROLUX	ZANUSSI	DIAMOND
2 burner gas top 1/2 M	E9GCGD2C00	Z9GCGD2S00	A9GCGD2C00
4 burner gas top 1 M	E9GCGH4C00	Z9GCGH4S00	A9GCGH4C00
4 burner gas range+oven 1 M	E9GCGHTCGA	Z9GCGHTCGA	A9GCGHTCGA
4 burner gas range+electric oven 1 M	E9GCGHTCEA	Z9GCGHTCEA	A9GCGHTCEA
6 burner gas top 1,5 M	E9GCGL6C00	Z9GCGL6S00	A9GCGL6C00
6 burner gas range+oven+cupboard	E9GCGLTC1A	Z9GCGLTC1A	A9GCGLTC1A
8 burner gas range+2 ovens 2 M	E9GCGP8CGA	Z9GCGP8SGA	A9GCGP8CGA
4 big burner gas range+oven 1 M	E9GCGHTCGB	Z9GCGHTCGB	A9GCGHTCGB
2 big burner gas top 1/2 M	E9GCGD2C0M	Z9GCGD2S0M	A9GCGD2C0M
4 big burner gas top 1 M	E9GCGH4C0M	Z9GCGH4S0M	A9GCGH4C0M
6 big burner gas top 1,5 M	E9GCGL6C0M	Z9GCGL6S0M	A9GCGL6C0M
6 big burner gas range+oven+cupb.	E9GCGLTC1B	Z9GCGLTC1B	A9GCGLTC1B
4 burner gas range + conv. oven 1 M	E9GCGH4CV0	Z9GCGH4SV0	A9GCGH4CV0
4 big burner gas range + conv. oven 1 M	E9GCGH4CVM	Z9GCGH4SVM	A9GCGH4CVM

Zanussi, Electrolux and Diamond brands differ only for slight cosmetic differences
*) For Natural Gas

Gas Types:
Natural and Propane Gas

AGA Code:
AS4563-2004 Commercial Catering Gas Equipment

Manufacturer & Certificate Holder:
Electrolux Professional SPA
15 Viale Treviso 33170 Pordenone - Italy
Contact: Gianmarco Vortali Tel: +39 0434 380 415
e-mail: gianmarco.vortali@electrolux.it

Agent:
Electrolux – Tom Stoddart Pty Ltd
Zanussi – JL Lennard Pty Ltd
Diamond – Semak Food Service Equipment

Modification to Certificate No 6584:
Addition of new models, which differ from the current serie only for aesthetic details. New brand and distributor added.

Issue Date: 20/05/2016

Electrolux

Product Description

Type

These commercial cooking appliances are designed to operate on Natural or Propane Gas and consist of a range of 2, 4 and 6 burner cook-tops with some models also having gas or electric ovens. Features include: stainless steel construction, a pilot burner protected by flame failure device, piezo electric oven ignition and oven thermostat.

General Information

	_9GCGD2C00 _9GCGD2S00	_9GCGH4C00 _9GCGH4S00	_9GCGHTCGA _9GCGHTCGA	_9GCGLTC1A _9GCGLTC1A	_9GCGP8CGA _9GCGP8SGA
Height(mm)	280	280	900	900	900
Width(mm)	400	800	800	1200	1600
Depth(mm)	900	900	900	900	900

XP/EVO 900			Appliance Composition				
ELECTROLUX	ZANUSSI	DIAMOND	Small Burner	Large Burner	Gas Oven	Electric Oven	Storage Comp
E9GCGD2C00	Z9GCGD2S00	A9GCGD2C00	2				
E9GCGH4C00	Z9GCGH4S00	A9GCGH4C00	3	1			
E9GCGHTCGA	Z9GCGHTCGA	A9GCGHTCGA	3	1	1		
E9GCGHTCEA	Z9GCGHTCEA	A9GCGHTCEA	3	1		1	
E9GCGL6C00	Z9GCGL6S00	A9GCGL6C00	4	2			
E9GCGLTC1A	Z9GCGLTC1A	A9GCGLTC1A	4	2	1		1
E9GCGP8CGA	Z9GCGP8SGA	A9GCGP8CGA	6	2	2		
E9GCGHTCGB	Z9GCGHTCGB	A9GCGHTCGB		4	1		
E9GCGD2C0M	Z9GCGD2S0M	A9GCGD2C0M		2			
E9GCGH4C0M	Z9GCGH4S0M	A9GCGH4C0M		4			
E9GCGL6C0M	Z9GCGL6S0M	A9GCGL6C0M		6			
E9GCGLTC1B	Z9GCGLTC1B	A9GCGLTC1B		6	1		1
E9GCGH4CV0	Z9GCGH4SV0	A9GCGH4CV0	3	1	fan forced		
E9GCGH4CVM	Z9GCGH4SVM	A9GCGH4CVM		4	fan forced		

Note(*): Small Burner – 24.5 MJ/h per burner(NG), 23 MJ/h per burner(Propane)
Large Burner – 36 MJ/h per burner (NG), 35 MJ/h per burner (Propane)
Static Oven – 30.6 MJ/h per burner (NG), 30.6 MJ/h per burner (Propane)
Fan Forced Oven - 37.8 MJ/h per burner (NG), 36.8 MJ/h per burner (Propane)

(*): The relevant NGC has been revised upon the data reported by AGA Lab (TR n° R11073004) superseding the AGILITY TR n°511279 NGC results, where applicable.

Technical Information:

Gas:

Burner : Open Top- Small	Natural Gas	LPG (Propane)
Gas Consumption MJ/h	21	21
Injector Size mm	2.2	1.30
Test Point Pressure kPa	1.00	2.65

Burner : Open Top - Large	Natural Gas	LPG (Propane)
Gas Consumption MJ/h	36	36
Injector Size mm	2.75	1.60
Test Point Pressure kPa	1.00	2.65

Burner : Oven	Natural Gas	LPG (Propane)
Gas Consumption MJ/h	30.6	30.6
Injector Size mm	2.45	1.50
Test Point Pressure kPa	1.00	2.65

Construction:

Description – The appliance is primarily constructed of Stainless steel panels AISI 304.

Outer Panels –

Material - Stainless SteelAISI304
Thickness – 0.8mm sides and rear
1.5mm front
Assembly - Folded formed, screwed and welded

Inner Panels -

Material – Stainless Steel Aisi 304
Thickness – 1.0mm

Insulation

Material – Fibreglass with aluminium backing
Thickness – 25mm
Location – Oven: is wrapped around oven cavity

Legs - The appliance is designed to be mounted on legs, which are adjustable between 150mm and 200mm.

Gas Components:

Inlet Thread: 1/2inch male thread

Piping:	Inlet	Material	Zinc plated steel
		Diameter	21mm
		Construction	The pipe is formed to convey the gas from the inlet to the valves mounted behind the front panel.
	Manifold	Material	Zinc plated steel
		Diameter	21mm

Burner Connection:

Material	Zinc plated steel	
Diameter	10mm	(4mm for pilot assembly)
Construction	The pipe is formed to convey the gas from the control valves to the injector block at each burner.	

Regulator:	**Make –**	**Maxitrol**
	Model –	**RV48**
	AGA No.	**3088**
	Location:	**Inlet to appliance**
Test Points:	**Type:**	**Brass with internal screw**
	Location:	**Manifold behind front cover**
Valves:	**Open Top Burner**	
	Make:	**Pintossi**
	Model:	**21S**
	AGA No.	**4062**
	Connection:	**Saddle type mount on inlet with nut and olive outlet.**
Valves:	**Oven-**	
	Make:	**Mertik**
	Model:	**GV 30-T**
	AGA No.	**Not available**
	Connection:	
	Refer Drawing: 599898700	
Thermocouple:	**SIT 0.200**	

Burners: Open Top - Small

Components:

Burner Base: (Venturi Support)
Material – Die cast Aluminium
Drawing No. 510819003

Burner Venturi
Material - Die-cast Aluminium (Piral)
Dimensions - 146 mm high X 44mm wide
Drawing No. 510819103

Burner Skirt
Material – Brass
Dimensions - 76.5mm wide X 23.2mm high
Drawing No. 510819303

Burner Head:
Material – Brass
Dimensions - 62.4mm wide X 26mm high
Ports – Upper - 4 groups of 6 @ 2.60mm diameter
Lower - 4 groups of 6 @ 2.60mm diameter
Retention - 1.60mm diameter
Drawing No. 510819501

Injectors:
Material: Brass
Dimensions: 12mm high X 12mm wide
Drawing no. a05157009

Pot Support: Zanussi - Material Chromed plated steel
Dimensions 12mm diameter with 4 large fingers at 90° with the tips spaced 100mm apart. 4 smaller fingers at 45° spaced at 260mm apart. Clearance from top of burner to trivet 38mm.
Electrolux – Material Cast iron 390mm wide X 370mm deep X 58mm high. 4 large trivet finders 135mm long with 98mm centre gap. 4 angled trivet fingers 140mm long. 8 small located on the edge are 45mm long.
Vessel clearance is 42mm to port centres.

Pilot Assembly A pilot assembly is mounted between the front and rear burner to provide ignition. Pilot is positioned 15mm from burner head.
Refer drawing 806820900

Burners: Open Top - Large

Components:

Burner Base: (Venturi Support)
Material – Die cast Aluminium
Drawing No. 510819003

Burner Venturi
Material - Die-cast aluminium (Piral)
Dimensions - 146 mm high X 50mm wide
Drawing No. 510820602

Burner Skirt
Material – Brass
Dimensions - 99.6mm wide X 23.2mm high
Drawing No. 510819203

Burner Head:
Material – Brass
Dimensions - 101.6mm wide X 27.8mm high
Ports – Upper - 4 groups of 11 ports @2.50mm diameter
Lower - 4 groups of 11 ports @2.50mm diameter
Retention - 1.60mm diameter
Drawing No. 510819401

Injectors:
Material: Brass
Dimensions: 12mm high X 12mm wide
Drawing no. a05157009

Pot Support: Zanussi - Material Chromed plated steel
Dimensions 12mm diameter with 4 large fingers at 90° with the tips spaced 100mm apart. 4 smaller fingers at 45° spaced at 260mm apart.Clearance from top of burner to trivet 42mm.
Electrolux – Material Cast iron 390mm wide X 370mm deep X 58mm high. 4 large trivet finders 135mm long with 98mm centre gap. 4 angled trivet fingers 140mm long. 8 small located on the edge are 45mm long.
Vessel clearance is 48mm to port centres.

Pilot Assembly A pilot assembly is mounted between the front and rear burner to provide ignition. Pilot is located 15mm from burner head.
Refer drawing 806820900

Burners: oven

Components:

Burner Assembly:
Material – Stainless steel
Dimensions - Overall - 733mm
Burner Head - 622mm
Drawing No. 830860902

Injectors:
Material Brass
Dimensions: 30mm long X 10mm
Drawing no. 599816501

Pilot:
Make SIT
Model 0140104
Refer drawing: 830884100
Location For location refer drawing820189020

Thermostat sensor location
Right side panel of cavity 140mm from front and 50mm from top panel and is fitted behind a metal guard.

Oven Cavity 575mm wide X 290mm high (bottom plate) X 675mm deep.

Oven Shelf Oven slide of chrome plated steel 525mm wide X 650mm deep supplied with a single shelf.

Flueing Details An opening in the rear panel at the top centre measures 240mm X 50mm. This is channelled to the terminal located behind the boiling burners and measures 245mm X 28mm. A guard is placed over the flue outlet.

Oven Base: The oven base plate is 5mm cast steel with a gap at the sides of the cavity of 15mm to allow heat to enter the oven.

Clearances measured from oven base panel:

Burner centre	31
Deflector panel	81.7
Oven Cavity Base	100.9
Refer Drawing	820189020

Heat Deflector Plate:

A stainless steel panel is fitted above the burner to deflect heat to the sides where it enters the oven cavity. The plate measures 200mm wide x 665mm long and is 2.5mm thick.

Electrical Details:

TCA Electrical Report: 47538.3

Components:

ELECTRIC OVEN
- Switch

Type "EGO", Model 41.4
- Working thermostat

Type "EGO", Model 55.34
- Safety thermostat

Type "EGO", Model 55.34
- Electric heating element

Type "EGO", 400V 1.5 kW
Type "RICA", 400V 1.5 kW

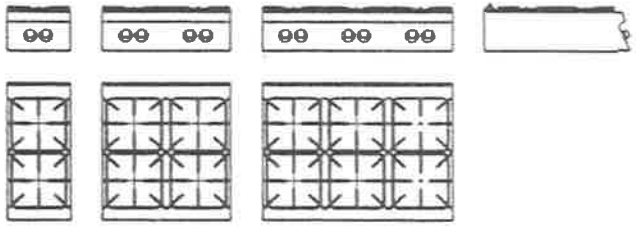

200100 200101 200103
210100 210101 210103
220100 220101 220103

200122 200123 200124
210122 210123 210124
220122 220123 220124

200113 200114 200115
210113 210114 210115
220113 220114 220115

200132 200133 200134
210132 210133 210134
220132 220133 220134

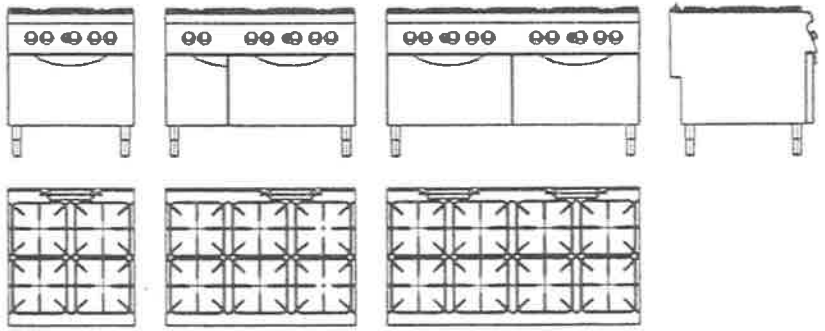

200102 200146 200104 200105
210102 210146 210104 210105
220102 220146 220104 220105

200106 200147 200117 200118
210106 210147 210117 210118
220106 220147 220117 220118

200121 200148 200145
210121 210148 210145
220121 220148 220145

200116
210116
220116

200144
210144
220144

PB0206
PB0207

ESTETICA 200XXX

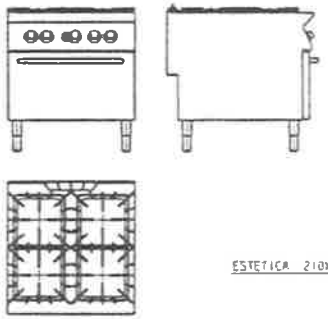

ESTETICA 210XXX

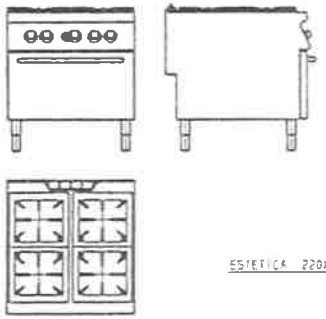

ESTETICA 220XXX

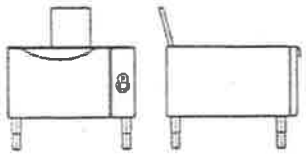

200256
210256
220256

01

Electrolux Professional

CUCINA A GAS
ESTENSIONI

820189030

capello drum electrolux, ix

Elco 900

4 burners gas range on gas oven

The Electrolux 900-Line of modular cooking equipment is designed to meet the heavy duty cooking requirements of institutional caterers and the larger restaurants and hotel kitchens. The flexibility of the modular design, with innumerable configurations either free-standing, bridged or cantilever, can be precisely tailored to meet the needs of the caterer. Gas boiling tops are available in a choice of two, four, or six burners for operation with Natural gas or LPG. The models detailed on this sheet have 4 burners and a gas heated oven.

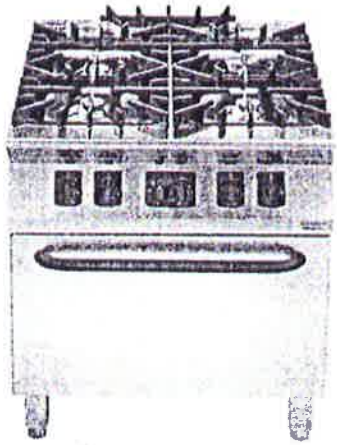

210102

EASY TO INSTALL
- Mounted on stainless steel feet with height adjustment up to a height of 50 mm.
- All models can be easily mounted on cantilever system.
- Main connections can be via the rear or the base of the unit.
- All models provided with service duct to facilitate installation

EASY TO CLEAN
- Worktop in 2 mm, 304 AISI stainless steel.
- Front, side, rear and bottom panels in stainless steel with Scotch Brite finish.
- Grids in cast iron are washable in a dishwasher.
- Oven chamber with 3 levels of runners to accommodate 2/1GN shelves
Ribbed, cast-iron oven base plate.
- All models have right-angled side edges to allow flush-fitting joins between units, eliminating gaps and possible dirt traps.
- The special design of the control knob system guarantees against water infiltration.

EASY TO USE
- Units are 93 cm deep to give an unusually large working surface area.
- Choice of two burner sizes for efficiently heating both large and small pans:
  - 60 mm burners with continuous power regulation from 1,5 to 6 kW
  - 100 mm burners with continuous power regulation from 2,2 to 10 kW.
- Energy efficiency: 60%.
- Manual ignition of the top burners and piezo ignition for the oven.
- Burners with optimized combustion interchangeable on site.
- All gas appliances are supplied for use with natural gas, with LPG conversion jets supplied as standard.

Electrolux

DATE: 01 August, 2007
TO: Ivan Marsic
ELECTROLUX REFERENT: Franco De Carlo / Diego Candido
OFFICE: Modular Laboratory
DIRECT TELEPHONE: +39 0434 380586

Object:

Technical Data and Data Plate draft

(for the complete technical data set refer to the specific booklet)

TABLE B - Gas pressure and nozzle data

GAS TYPE			Naturalgas						LPG					
			Nominal		Min.		Max.		Nominal		Min.		Max.	
TEST POINT PRESSURE		(kPa)	[illegible]		[illegible]		[illegible]		[illegible]		[illegible]		[illegible]	
BURNERS		Ø (mm)	MJ/h	Aerator	MAX nozzle		MIN nozzle		Pilot	Aerator	MAX nozzle		MIN nozzle		Pilot
				mm	mm	Stamp	mm	Stamp	mm	mm	mm	Stamp	mm	Stamp	mm
Cooktop	Max	[illegible]	[illegible]	[illegible]	[illegible]	[illegible]	[illegible]	[illegible]	[illegible]	[illegible]	[illegible]	[illegible]	[illegible]	[illegible]	[illegible]
	Min		[illegible]												
Cooktop	Max	[illegible]	[illegible]	[illegible]	[illegible]	[illegible]	[illegible]	[illegible]	[illegible]	[illegible]	[illegible]	[illegible]	[illegible]	[illegible]	[illegible]
	Min		[illegible]												
Oven	Max	[illegible]	[illegible]	[illegible]	[illegible]	[illegible]	[illegible]	[illegible]	[illegible]	[illegible]	[illegible]	[illegible]	[illegible]	[illegible]	[illegible]
	Min	[illegible]	[illegible]												

Fuel gas consumption

MODELS	[illegible]	[illegible]
	[illegible]	[illegible]
	[illegible]	[illegible]
	[illegible]	[illegible]
	[illegible]	[illegible]
	[illegible]	[illegible]
	[illegible]	[illegible]
	[illegible]	[illegible]
	[illegible]	[illegible]
	[illegible]	[illegible]
	[illegible]	[illegible]

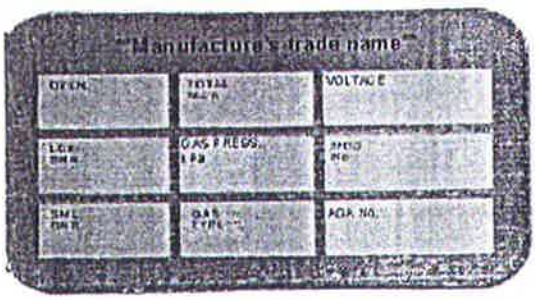

ELECTROLUX PROFESSIONAL SPA

REGISTERED OFFICE
SEDE LEGALE
VIALE TREVISO, 15
33170 PORDENONE (I)

TELEPHONE/TEL.
+39 0434 3801

TELEFAX
+39 0434 380701

FISCAL NUMBER
REGISTER OF COMPANIES
COD. FISC. E REGISTRO
IMPRESE DI PN NUM.
00072220932

PAID UP SHARE CAPITAL
CAPITALE SOCIALE
EURO 7.998.000 I.V.

ITC 312

STAB. DI PORDENONE
VIALE TREVISO, 15
33170 PORDENONE

TELEFAX
+39 0434 380555

VAT CODE
P. IVA E CODICE ISO
IT 00072220932

R.E.A.
N. 4307

C.C.P.
00771988

The Electrolux Group. The world's No.1 choice.

119

RANGE COMPOSITION

N 900: a range of over 150 models for the professional caterer designed to guarantee the highest level of performance, reliability, energy saving, safety standards and ergonomic operation. These concepts are reflected in the total modularity of the range that ensures innumerable configurations, either free-standing, bridged or cantilever. N900 demonstrates how advanced technology can satisfy the needs of the professional caterer.
The models detailed on this sheet are 4 burners gas ranges on gas or electric oven with 304 AISI stainless steel grids.

N 900

4 BURNERS GAS RANGES

ZANUSSI PROFESSIONAL

FUNCTIONAL AND CONSTRUCTION FEATURES

◆ Burners with optimized combustion interchangeable on site, flame failure device and protected pilot light:
- 60 mm burners with continuous power regulation from 1,5 to 6 kW.
- 100 mm burners with continuous power regulation from 2,2 to 10 kW
◆ Manual ignition of the top burners and piezo iginition for the oven
◆ Electric oven with switch knob to control top and bottom heating elements. Oven thermostat with temperature markings in °C adjustable from 110° to 285°C.
◆ Gas oven with stainless steel burners, self-stabilizing flame positioned beneath the base plate and a thermostat adjustable from 120° to 280°C.

TECHNICAL DATA

CHARACTERISTICS	MODELS				
	NCFG800 200102	NCFG801 200121	NCFGE800 200106	NCFG802 200148	NCFGE8002 200146
Power supply	Gas	Gas	Gas/Electric	Gas	Gas/Electric
External dimensions - mm					
width	800	800	800	800	800
depth	900	900	900	900	900
height	850	850	850	850	850
height adjustment	50	50	50	50	50
Oven cavity - mm					
width	575	575	575	575	575
depth	700	700	700	700	700
height	300	300	300	300	300
Oven					
temperature min-max - °C	120, 280	120, 280	110, 285	120, 280	110, 285
heat input - kW	8.5	8.5	6	8.5	6
Back burner dimensions - mm	60, 100	100, 100	60, 100	60, 60	60, 100
Back burners power - kW	6, 10	10, 10	6, 10	6, 6	6, 10
Front burners dimension - mm	60, 60	100, 100	60, 60	60, 60	60, 60
Front burners power - kW	6, 6	10, 10	6, 6	6, 6	6, 6
Net weight - kg.	155	155	155	155	203
Supply voltage			400, 3N, 50/60		230, 3, 50/60
INCLUDED ACCESSORIES					
2/1 GN CHROME GRID	1	1	1	1	1

200102 200145 200148 200106 200121

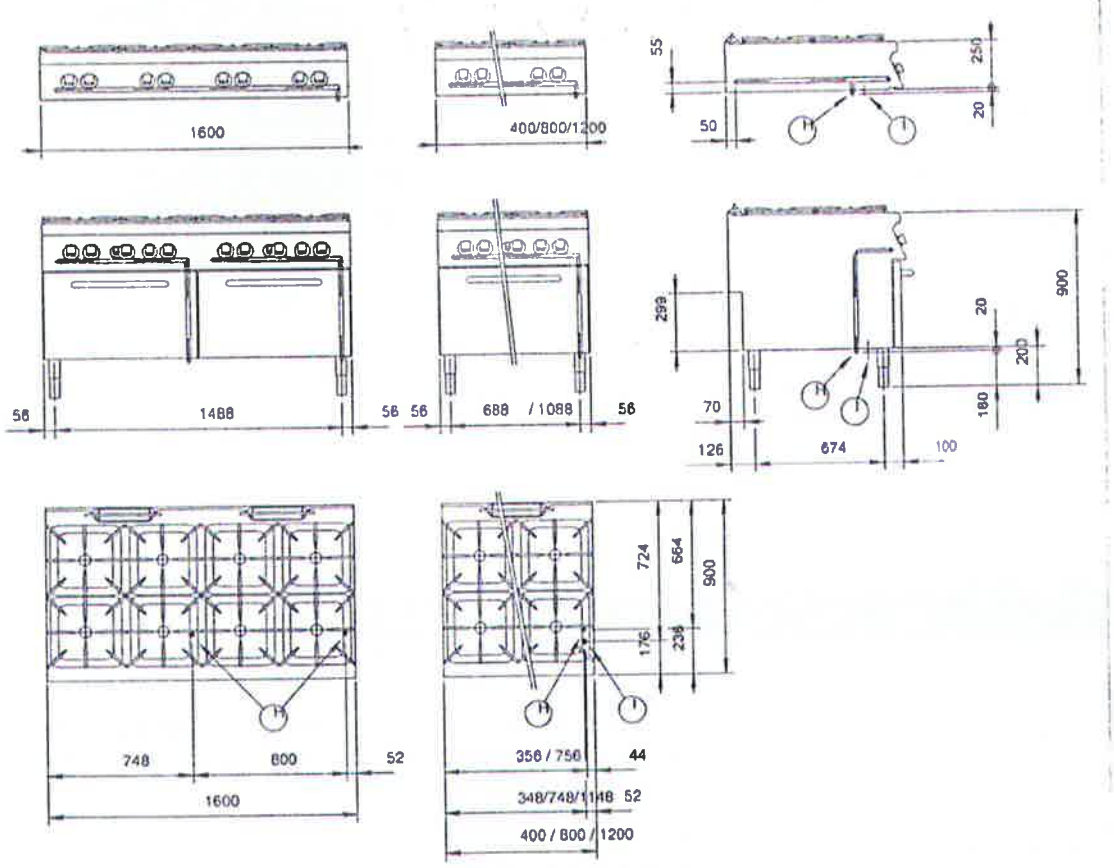

LEGEND	NCFG800 200102	NCFG801 200121	NCFGE809 200106	NCFG802 200148	NCFGE8002 200148
H - Gas connection	1/2"	1/2"	1/2"	1/2"	1/2"
I - Electrical connection			400, 3N, 50/60		230, 3, 50/60

ZANUSSI PROFESSIONAL

www.zanussiprofessional.it

The Company reserves the right to alter technical specifications without prior notice.

llc

Electrolux

Product Description (commercial range with fan forced gas oven)

General Information:
These commercial cooking appliances are designed to operate on Natural or Propane Gas and consist of an upgrading of current boiling table with new ventilated gas oven with single burner. Features include: stainless steel construction, a pilot burner protected by flame failure device and oven thermostat. There are 2 configurations with different power open burners (already approved by AGA).

(for the relevant codes refer to page 1)

Electrolux

Product overall dimension/design

Boiling top 4 burners over ventilated gas oven

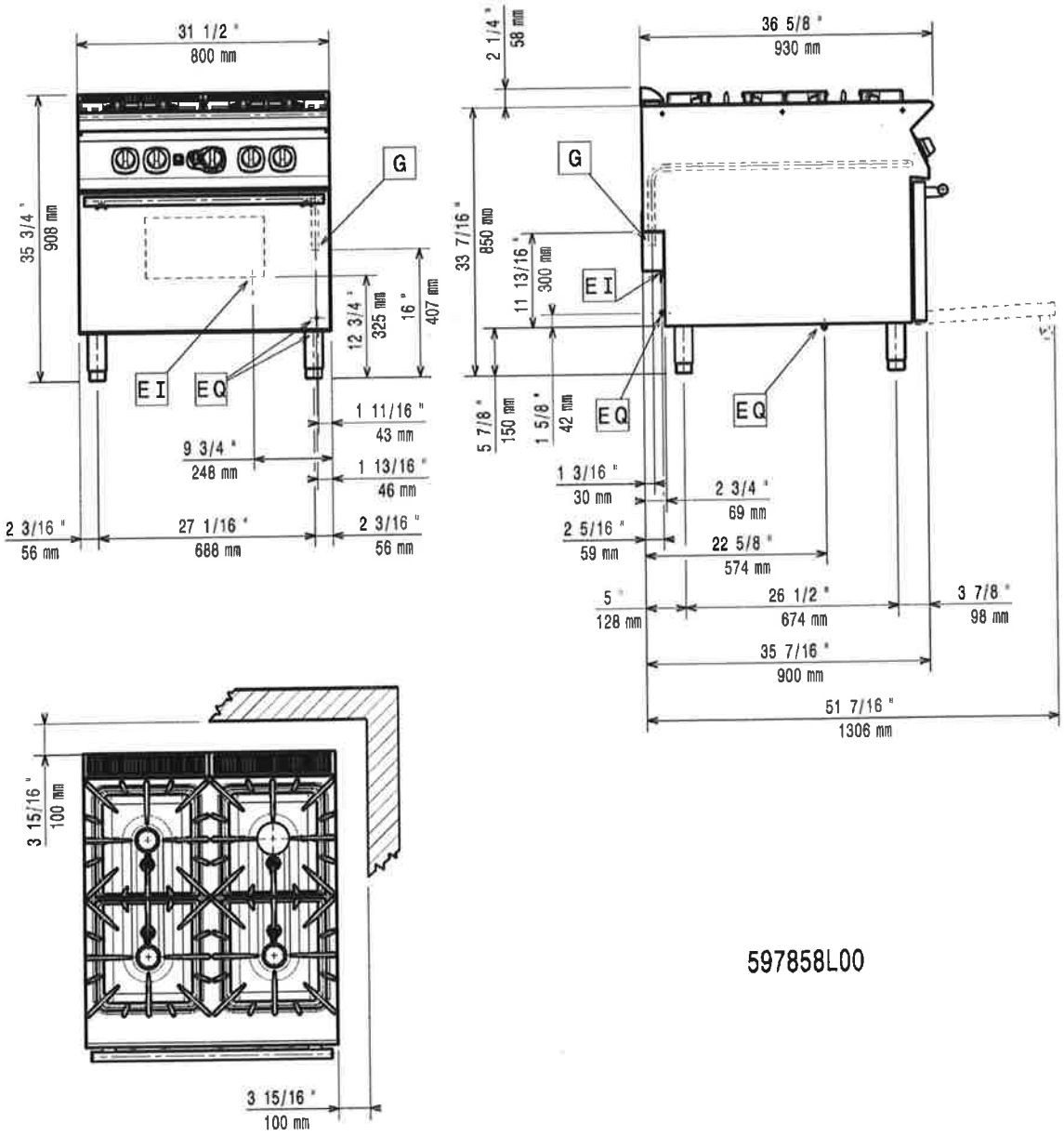

597858L00

ELECTROLUX PROFESSIONAL SPA
REGISTERED OFFICE
SEDE LEGALE
VIALE TREVISO, 15
33170 PORDENONE (Italy)
www.electrolux.com/professional
REGISTRO A.E.E.
N. IT08020000000553
TELEPHONE/TEL.
+39 0434.3801
TELEFAX
+39 0434.380201
R.E.A.
N. 4307
FISCAL NUMBER
REGISTER OF COMPANIES
COD. FISC. E REGISTRO
IMPRESE DI PN NUM.
00072220932
VAT CODE
P. IVA E CODICE ISO
IT 00072220932
PAID UP SHARE CAPITAL
CAPITALE SOCIALE
EURO 7.998.000 I.V.
COMPANY WITH A SOLE SHAREHOLDER
SOCIETÀ CON SOCIO UNICO
MANAGEMENT AND COORDINATION EX ART. 2497 CIVIL CODE
AB ELECTROLUX (PUBL.) - STOCKHOLM (SWEDEN)
DIREZIONE E COORDINAMENTO EX ART. 2497 CODICE CIVILE
AB ELECTROLUX (PUBL.) - STOCCOLMA (SVEZIA)

01910000139

Electrolux

Exploded Drawing

The appliances comprise a series of stainless steel panels spot welded, screwed or pop riveted together. The units are supported by adjustable stainless steel legs.

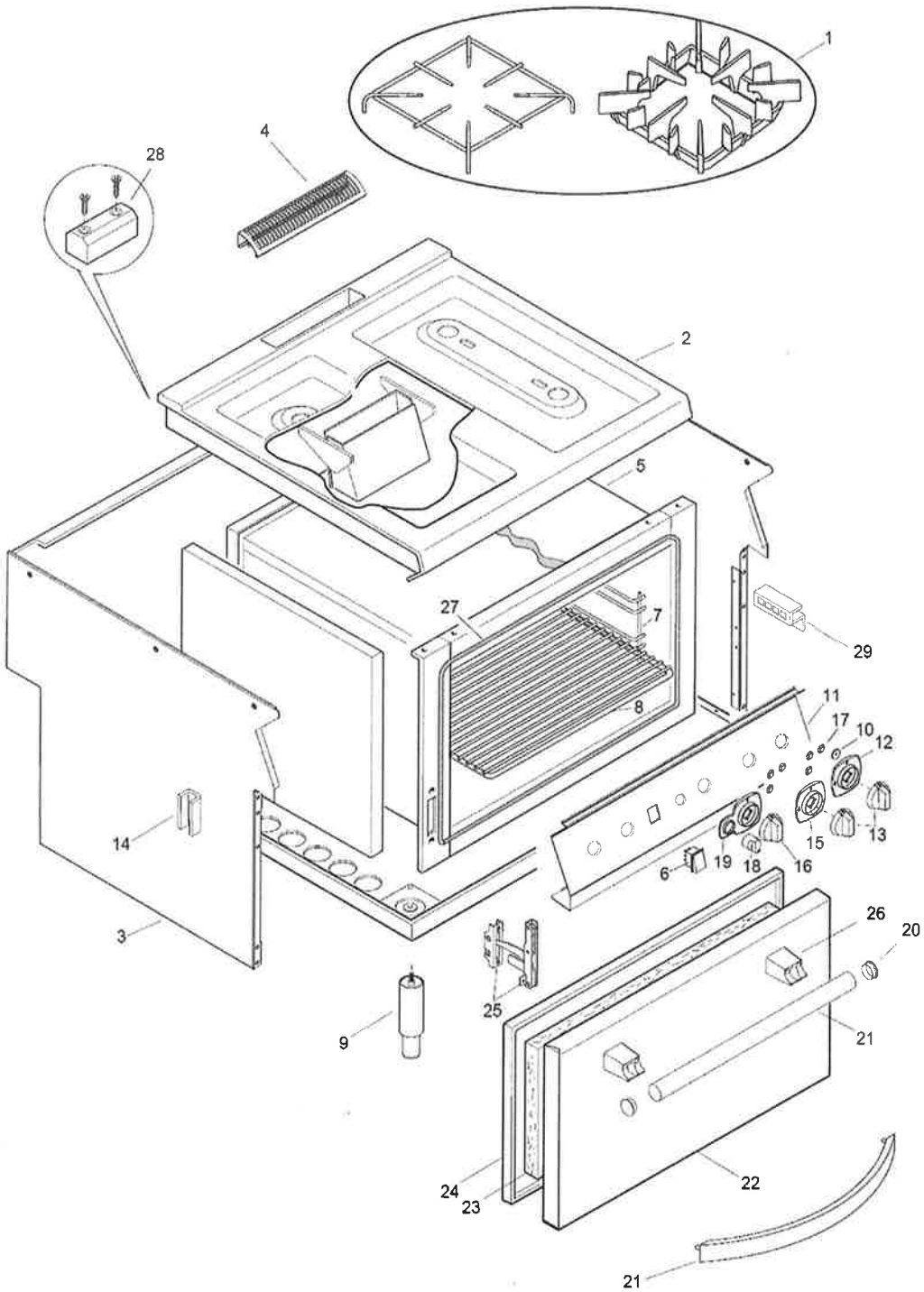

Electrolux

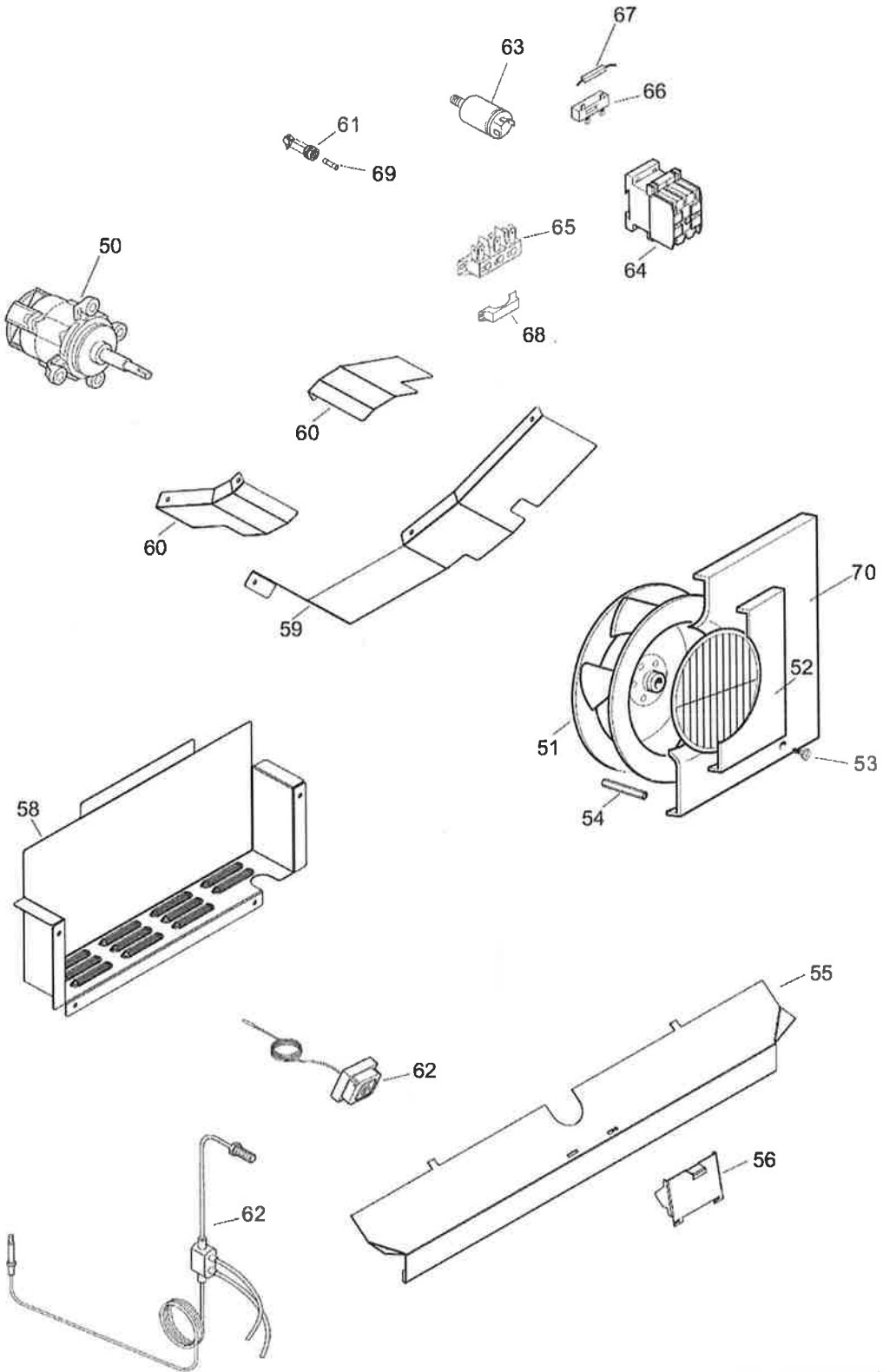

ELECTROLUX PROFESSIONAL SPA

REGISTERED OFFICE
SEDE LEGALE
VIALE TREVISO, 15
33170 PORDENONE (Italy)
www.electrolux.com/professional

REGISTRO A.E.E.
N. IT08020000000553

TELEPHONE/TEL.
+39 0434.3801

TELEFAX
+39 0434.380201

R.E.A.
N. 4307

FISCAL NUMBER
REGISTER OF COMPANIES
COD. FISC. E REGISTRO
IMPRESE DI PN NUM.
00072220932

VAT CODE
P. IVA E CODICE ISO
IT 00072220932

PAID UP SHARE CAPITAL
CAPITALE SOCIALE
EURO 7.998.000 I.V.

COMPANY WITH A SOLE SHAREHOLDER
SOCIETÀ CON SOCIO UNICO

MANAGEMENT AND COORDINATION EX ART. 2497 CIVIL CODE
AB ELECTROLUX (PUBL.) - STOCKHOLM (SWEDEN)
DIREZIONE E COORDINAMENTO EX ART. 2497 CODICE CIVILE
AB ELECTROLUX (PUBL.) - STOCCOLMA (SVEZIA)

0191000139

Electrolux

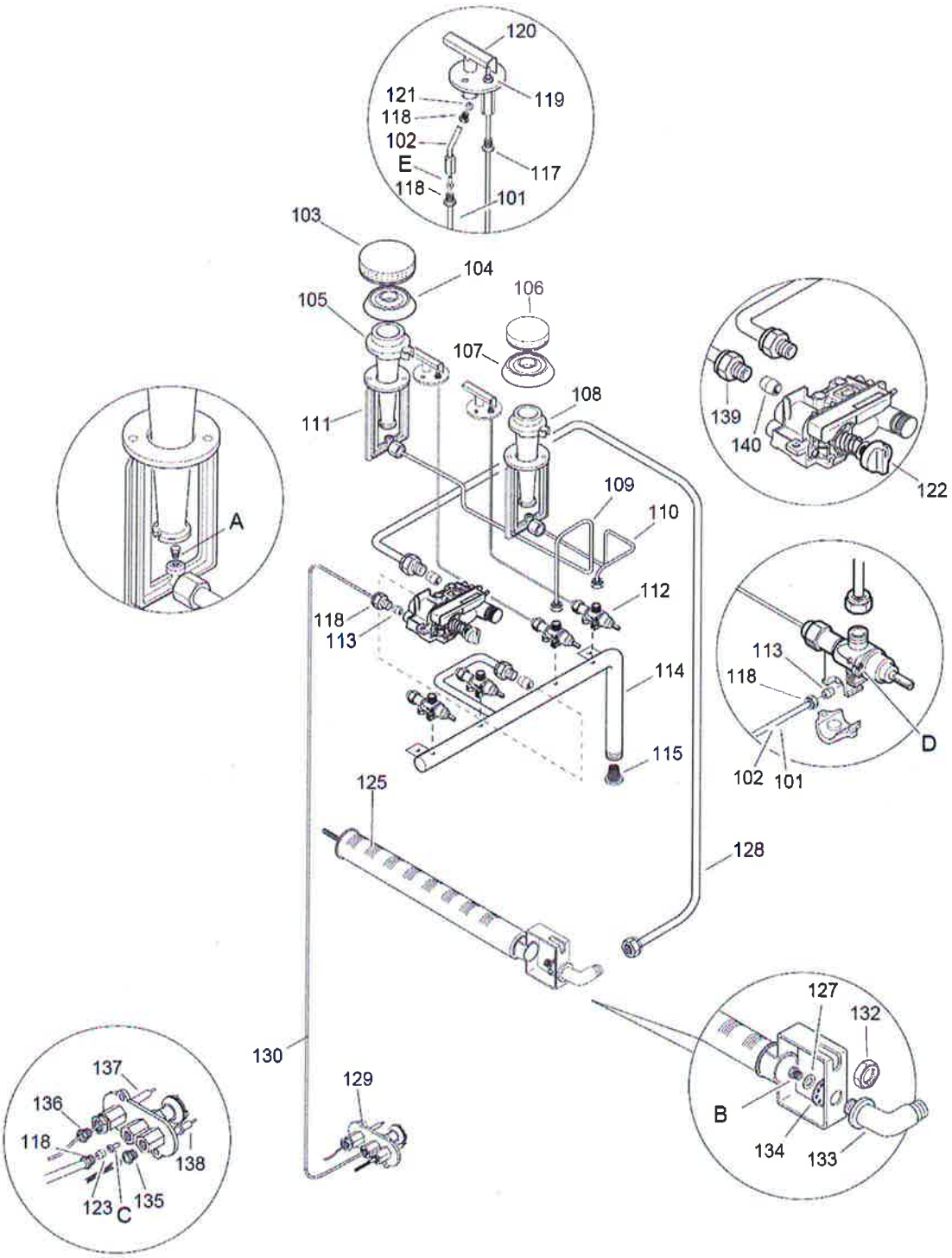
120
121
119
118
102
E
117
118
101
103
104
106
105
107
108
111
139
140
122
A
109
110
112
118
113
114
115
113
118
D
102
101
125
128
130
129
127
132
B
134
133
137
136
118
138
123
C
135

Electrolux

Gas System

Description
Gas enters the appliance at the ISO 7-1 ½" male gas inlet for Natural or Propane Gas. The manifold is directly attached to the gas inlet and the gas valves are fitted to the manifold with a clamp. Pipes connect the gas valve outlets to the burner venturi supports.

Gas Configuration

Nominal Gas Consumption			Natural Gas [MJ/h]	Propane Gas [MJ/h]
Z9GCGH4SV0	E9GCGH4CV0	3 small gas burners + 1 big gas burner + conv. oven 1 M	147.3	140.8
Z9GCGH4SVM	E9GCGH4CVM	4 big gas burners + conv. oven 1 M	181.8	176.8

Test point

	Natural Gas [kPa]	Propane Gas [kPa]
Test Point pressure	1	2.65

Burner Configuration

Natural Gas	Main Injector [mm]	Bypass Screw [mm]	Nominal Gas Consumption [MJ/h]
Burner – Cooktop big	2.75	1.05	36
Burner – Cooktop small	2.20	0.80	24.5
Burner – Fan forced Oven	2.85	NA	37.8
Pilot Burner - Cooktop	0.41/"41"	NA	<0.5
Pilot Burner "Mark" – Fan Forced Oven	0.41/"41"	NA	<0.5

Aeration shutter Setting (mm) – Cooktop	NA
Aeration shutter Setting (mm) – Oven	31.5

Propane Gas	Main Injector [mm]	Bypass Screw [mm]	Nominal Gas Consumption [MJ/h]
Burner – Cooktop big	1.60	0.75	35
Burner – Cooktop small	1.30	0.55	23
Burner – Fan forced Oven	1.65	NA	36.8
Pilot Burner - Cooktop	0.25/"25"	NA	<0.5
Pilot Burner "Mark" – Fan Forced Oven	0.25/"25"	NA	<0.5

Aeration shutter Setting (mm) – Cooktop	NA
Aeration shutter Setting (mm) – Fan Forced Oven	31.5

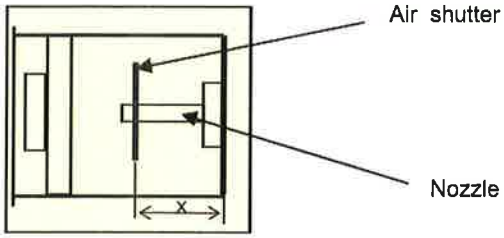

Air shutter setting

Fan Forced Gas Oven Components

Part	manufacturer	Model No.	Temp.	AGA #	Dwg.	Comments
Gas Regulator	Maxitrol	RV48, RV47	107℃	3088	594802 000	
Gas Regulator (as alternative)	Bromic	980L, 986LP		5862		
Oven Gas Valve	Mertik	835859301			599898701	thermostatic control on-off
Oven Injector	POLIDORO				599816501	Brass
Oven Burner	POLIDORO				855899A00	AISI 430
Oven pilot Injector	SIT				599885600	
Oven pilot Assembly	SIT	0160032			83089F200	AISI 430
Oven Thermocouple		83089FH00			59989MZ0 0	L. 1450 M9X1
Safety Thermostat	EGO	646808600			594800000	
Condenser		694800300			599634900	
Contactor	B&J	K1-09D10 230			648727100	
Switch	MOLVENO	B418C1E000000			640804B00	
Main Board	ITW				639804900	
Resistor Support	ITW				639805100	
Resistor	RECO				617813201	
Fuse 160 Ma 5x20					652801800	
Motor	LAFERT				611804002	
Fan	PUNKER				682800400	
Suction Wall	Electrolux Professional				80589AR01	Steel
Fan Protection	Electrolux Professional				50189AL01	Steel
Wiring Diagram	Electrolux Professional				602896J01	

Electrolux

Technical Drawings

Gas pressure regulator

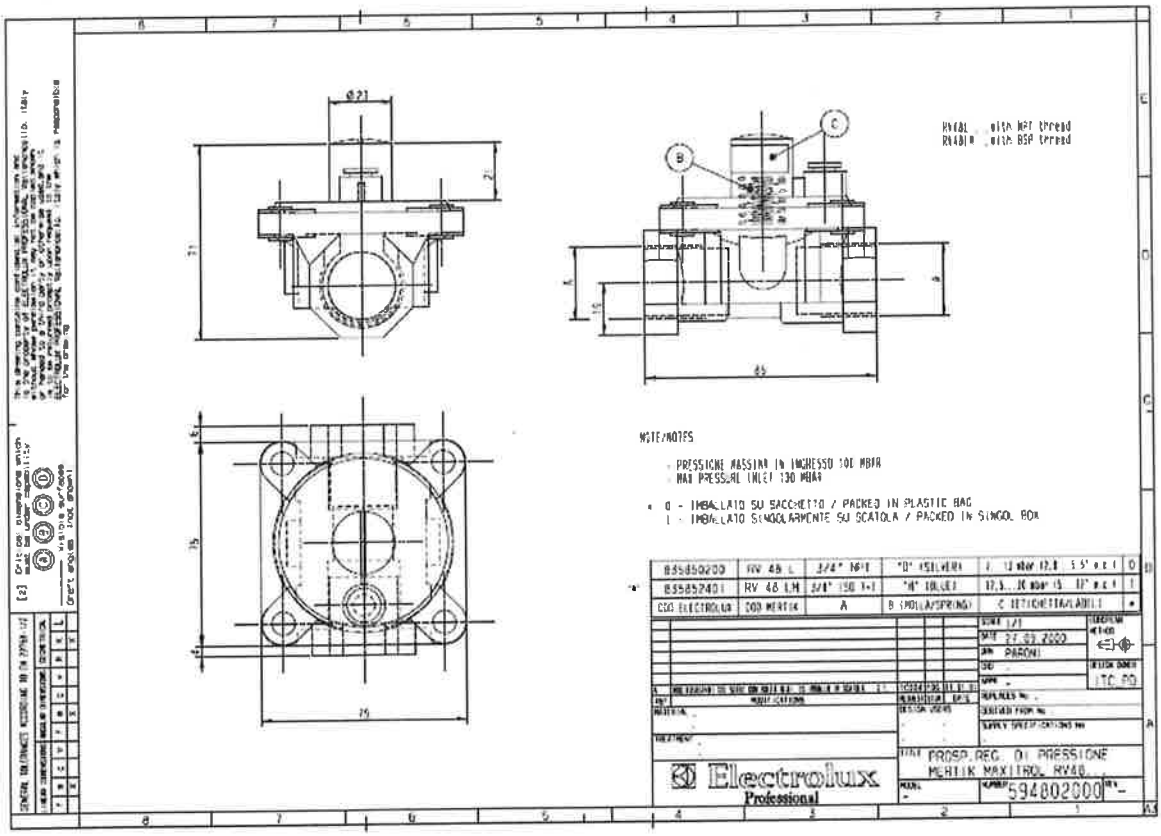

ITEM	PART / DRAWING CODE
Oven Gas Valve	599898703
Oven Injector	599816501
Ventilated oven Burner	855899A00
Oven pilot Injector	599885600
Ventilated oven pilot Assembly	83089F200
Oven Thermocouple	59989MZ00
Safety Thermostat	594800000
Capacitor	599634900
Contactor	648727100 / no dwg available
Switch	640804B00 / no dwg available
Main Board	639804900
Resistor Support	639805100
Resistor	617813201
Fuse 160 Ma 5x20	652801800 / no dwg available
Motor	611804002
Fan	682800401
Suction Wall	80589AR02
Fan Protection	50189AL03
Wiring diagram	0602896J03

Electrolux

Oven burner aerator	830827101
Oven shelf	51489DJ00
Oven grid	856814402
Ventilated oven side layout	820266010
Ventilated oven front layout	820266020
Open burner venturi support	510819003
Small open burner venture	510819103
Big open burner venture	510820602
Small open burner base	510819303
Big open burner base	510819203
Small open burner head	510819501
Big open burner head	510819401
Stainless steel pot support	510819608
Cast iron pot support	510821002
Open burner pilot assembly	806820900
Static oven burner	830860902
Static oven pilot assembly	830884101
Open burner tap	835857202
Open burner injector	A05157009
Static oven side layout	820189010
Static oven front layout	820189020

Electrolux

Overall design
Range

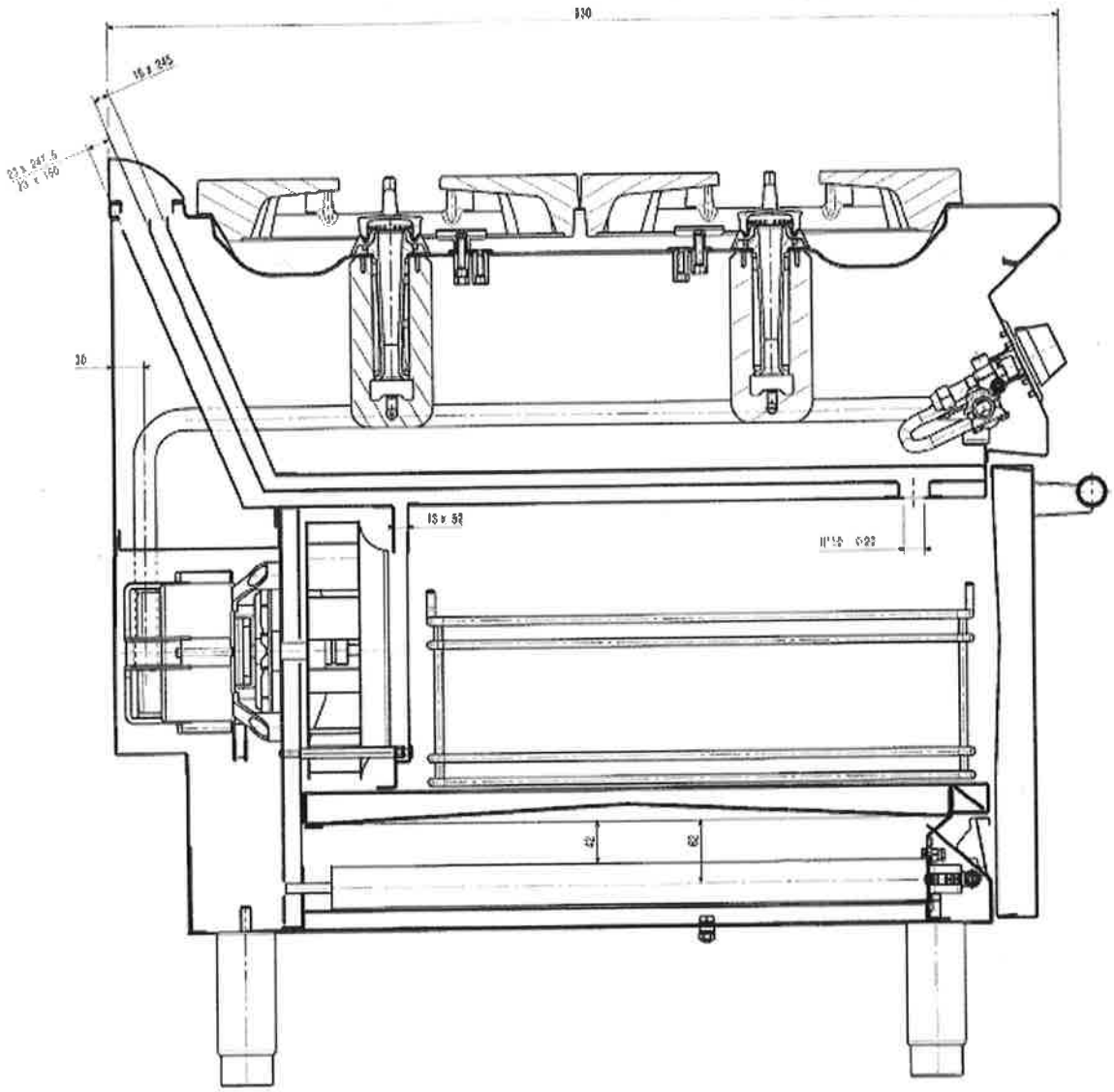

ELECTROLUX PROFESSIONAL SPA

REGISTERED OFFICE
SEDE LEGALE
VIALE TREVISO, 15
33170 PORDENONE (Italy)
www.electrolux.com/professional

REGISTRO A.E.E.
N. IT08020000000553

TELEPHONE/TEL.
+39 0434.3801

TELEFAX
+39 0434.380201

R.E.A.
N. 4307

FISCAL NUMBER
REGISTER OF COMPANIES
COD. FISC. E REGISTRO
IMPRESE DI PN NUM.
00072220932

VAT CODE
P. IVA E CODICE ISO
IT 00072220932

PAID UP SHARE CAPITAL
CAPITALE SOCIALE
EURO 7.998.000 I.V.

COMPANY WITH A SOLE SHAREHOLDER
SOCIETÀ CON SOCIO UNICO

MANAGEMENT AND COORDINATION EX ART. 2497 CIVIL CODE
AB ELECTROLUX (PUBL.) - STOCKHOLM (SWEDEN)
DIREZIONE E COORDINAMENTO EX ART. 2497 CODICE CIVILE
AB ELECTROLUX (PUBL.) - STOCCOLMA (SVEZIA)

0191000139

Electrolux

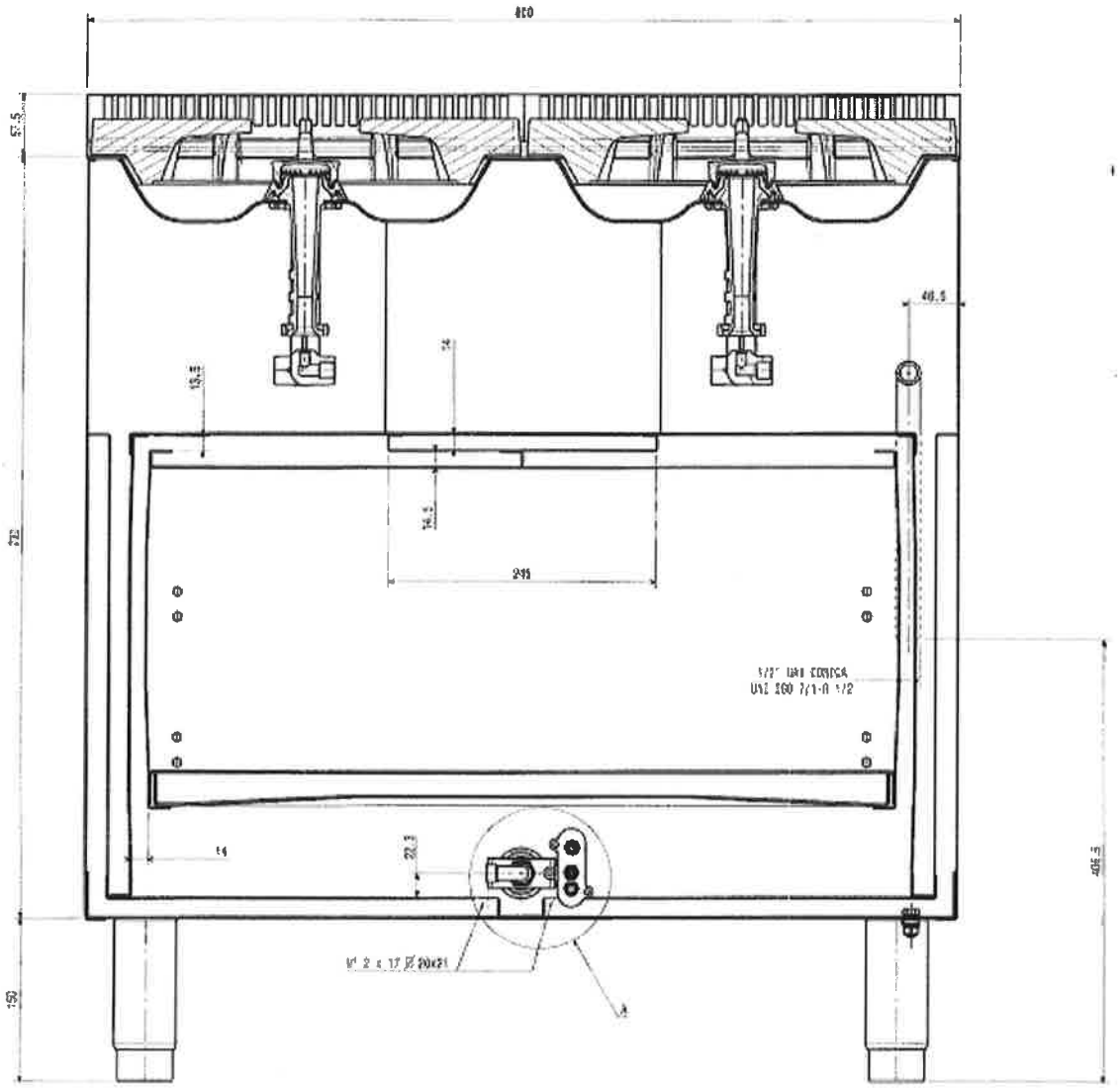

ELECTROLUX PROFESSIONAL SPA
REGISTERED OFFICE
SEDE LEGALE
VIALE TREVISO, 15
33170 PORDENONE (Italy)
www.electrolux.com/professional

REGISTRO A.E.E.
N. IT08020000000553

TELEPHONE/TEL.
+39 0434.3031

TELEFAX
+39 0434.380201

R.E.A.
N. 4307

FISCAL NUMBER
REGISTER OF COMPANIES
COD. FISC. E REGISTRO IMPRESE DI PN NUM.
00072220932

VAT CODE
P. IVA E CODICE ISO
IT 00072220932

PAID UP SHARE CAPITAL
CAPITALE SOCIALE
EURO 7.998.000 I.V.

COMPANY WITH A SOLE SHAREHOLDER
SOCIETÀ CON SOCIO UNICO

MANAGEMENT AND COORDINATION EX ART. 2497 CIVIL CODE
AB ELECTROLUX (PUBL.) - STOCKHOLM (SWEDEN)
DIREZIONE E COORDINAMENTO EX ART. 2497 CODICE CIVILE
AB ELECTROLUX (PUBL.) - STOCCOLMA (SVEZIA)

Electrolux

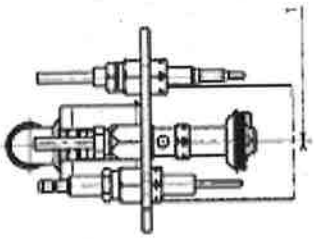

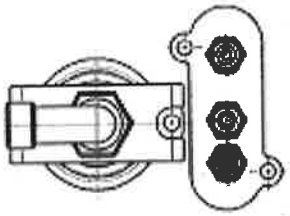

PART. A
SCALA 1:1.5

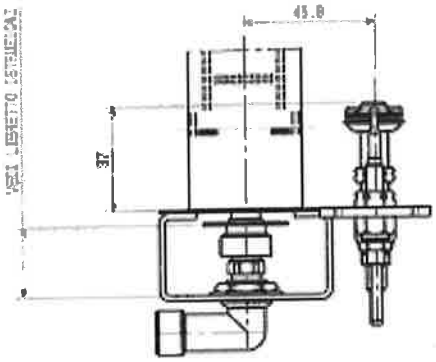

ELECTROLUX PROFESSIONAL SPA
REGISTERED OFFICE
SEDE LEGALE
VIALE TREVISO, 15
33170 PORDENONE (Italy)
www.electrolux.com/professional
REGISTRO A.E.E.
N. IT08020000000533
TELEPHONE/TEL.
+39 0434.3801
TELEFAX
+39 0434.380201
R.E.A.
N. 4307
FISCAL NUMBER
REGISTER OF COMPANIES
COD. FISC. E REGISTRO
IMPRESE DI PN NUM.
00072220932
VAT CODE
P. IVA E CODICE ISO
IT 00072220932
PAID UP SHARE CAPITAL
CAPITALE SOCIALE
EURO 7.998.000 I.V.
COMPANY WITH A SOLE SHAREHOLDER
SOCIETÀ CON SOCIO UNICO
MANAGEMENT AND COORDINATION EX ART. 2497 CIVIL CODE
AB ELECTROLUX (PUBL.) - STOCKHOLM (SWEDEN)
DIREZIONE E COORDINAMENTO EX ART. 2497 CODICE CIVILE
AB ELECTROLUX (PUBL.) - STOCCOLMA (SVEZIA)

Markings/Labels

Electrolux's dealers (Tom Stoddart Pty Ltd, JL Lennard Pty Ltd) on behalf of Electrolux Professional SpA are accountable for proper appliance labeling.

Data labels

Material: Adhesive backed paper (matt metallic).
Colour: Black on silver.

The Data Label must contain the following information:

- Manufacturer's trade name.
- Model designation.
- Month & year of manufacture or a serial number.
- Approved Gas Types.
- Total Nominal Gas Consumption in MJ/h.
- Test Point Pressure in kPa.
- Injector size.
- By-pass Gas Consumption in MJ/h (where applicable).
- AGA Certificate number.
- Electrical markings as required by electricity authority (where applicable).

<table>
<tr><td colspan="3">Electrolux
ELECTROLUX PROFESSIONAL SPA</td><td colspan="4"></td></tr>
<tr><td colspan="3">Model No: xxxxxxxxxxx</td><td colspan="4">s/n: xxxxxxxxx</td></tr>
<tr><td colspan="7">Description: xxxxxxxxxxx</td></tr>
<tr><td colspan="3" rowspan="4">Gas Approval No: AGA 6584 G
Gas Type: XXXXXXX
Gas Consumption (MJ/h): XX
Test Point Pressure (kPa): XXXX</td><td>Injector Size:</td><td>Pilot (#)</td><td>By-pass (mm)</td><td>Main (mm)</td></tr>
<tr><td>Large Hot Plate</td><td>xx</td><td>xx</td><td>xx</td></tr>
<tr><td>Small Hot Plate</td><td>xx</td><td>xx</td><td>xx</td></tr>
<tr><td rowspan="5">Electric Rating</td><td rowspan="5">V xx
Ph xx
Hz xx
W xx</td><td>Solid Top Burner</td><td>//</td><td>//</td><td>//</td></tr>
<tr><td>Oven Burner</td><td>xx</td><td>xx</td><td>xx</td></tr>
<tr><td>Main Burner</td><td>//</td><td>//</td><td>//</td></tr>
</table>

Electrolux

Gas Type - Natural Gas

Size: 35mm x 160mm
Material: Adhesive backed paper.
Colour: Black on white background.
Location: Near gas connection point.

Gas Type - Propane Gas

Size: 35mm x 160mm
Material: Adhesive backed paper.
Colour: Orange on white background.
Location: Near gas connection point.

Gas Connection Label

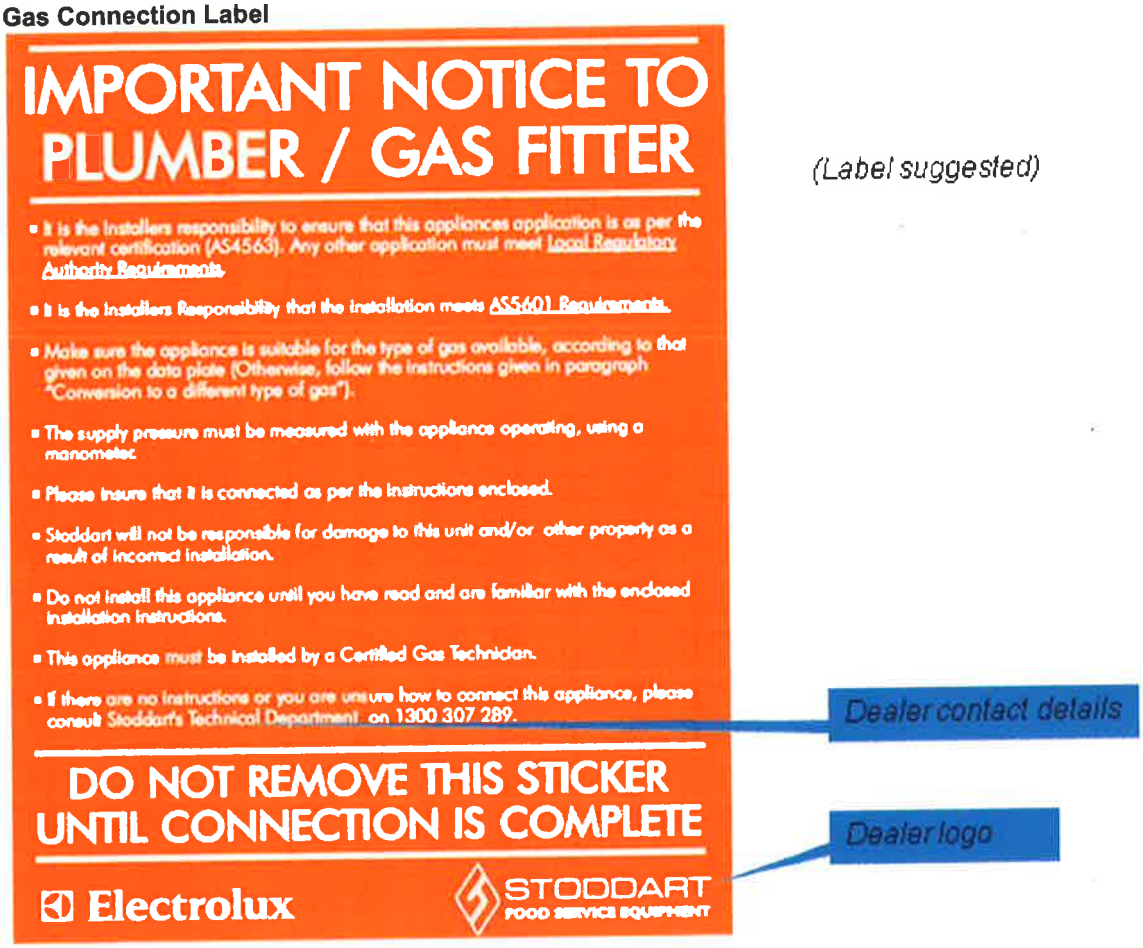

(Label suggested)

Dealer contact details

Dealer logo

Electrolux

(Label suggested)

IMPORTANT NOTICE TO PLUMBER

- This appliance is to be connected to an incoming tempered water supply. Refer to installation instructions
- This appliance is to be connected to an outgoing drainage supply. Refer to installation instructions
- This appliance is to be leveled correctly to ensure no external water loss. Refer to installation instructions
- Stoddart Food Service Equipment will not be responsible for damages to this appliance and/or property as a result of incorrect plumbing installation.
- If unable to locate this appliance's installation instructions, please contact Stoddart Food Service Equipment on (07) 3344 2444.

DO NOT REMOVE THIS STICKER UNTIL AFTER THIS APPLIANCE HAS BEEN COMMISSIONED

Electrolux

STODDART FOOD SERVICE EQUIPMENT

Relevant dealer

Dealer contact details

Dealer logo

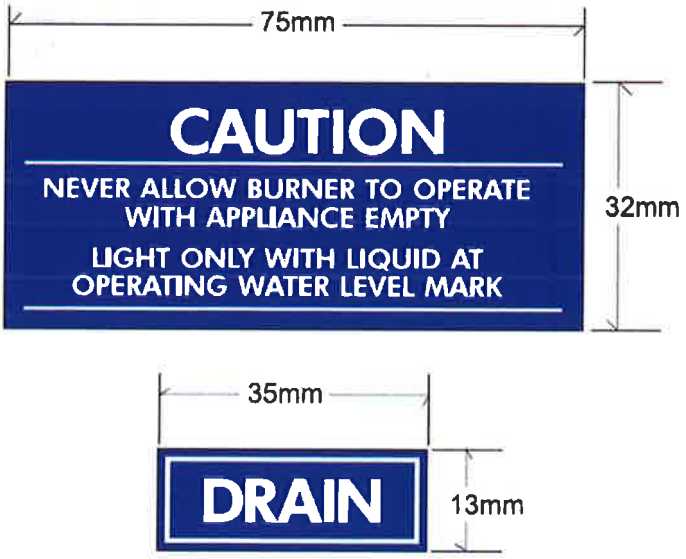

ELECTROLUX PROFESSIONAL SPA
REGISTERED OFFICE
SEDE LEGALE
VIALE TREVISO, 15
33170 PORDENONE (Italy)
www.electrolux.com/professional

TELEPHONE/TEL.
+39 0434 3801

TELEFAX
+39 0434 380201

FISCAL NUMBER
REGISTER OF COMPANIES
COD. FISC. E REGISTRO IMPRESE DI PN NUM.
00072220932

PAID UP SHARE CAPITAL
CAPITALE SOCIALE
EURO 7.998.000 I.V.

COMPANY WITH A SOLE SHAREHOLDER
SOCIETÀ CON SOCIO UNICO

REGISTRO A.E.E.
N. IT06020000000553

R.E.A.
N. 4307

VAT CODE
P. IVA E CODICE ISO
IT 00072220932

MANAGEMENT AND COORDINATION EX ART. 2497 CIVIL CODE
AB ELECTROLUX (PUBL.) - STOCKHOLM (SWEDEN)
DIREZIONE E COORDINAMENTO EX ART. 2497 CODICE CIVILE
AB ELECTROLUX (PUBL.) - STOCCOLMA (SVEZIA)

Electrolux

- *Commercial Catering (YELLOW) Maker's Warranty Badge to affirm product compliance with specifications:*

The Packaging Labels must contain the following information:

- *A warning notice shall be fitted:*
  TO BE INSTALLED ONLY BY AN AUTHORISED PERSON
- ***Brand, weight** in kilograms and **model number***

Electrolux

DATE: 25 May, 2012
TO: AGA
ELECTROLUX REFERENT: Diego Candido
OFFICE: Laboratory
DIRECT TELEPHONE: +39 0434 380783

Object:

Declaration of compliance with section 2.5 Materials of AS4563 – Commercial Catering Gas Equipment.

We, Electrolux Professional SpA declare that Braising Pan XP/EVO 900 appliances comply with section 2.5 of AS4563 as follows:

2.5.1 All materials and finishes, including dressings and lubricants are suitable for the conditions of use (e.g. corrosion, temperature, handling, contact with food, water etc).

2.5.2 There are no materials containing asbestos.

2.5.3 Materials in contact with gas are suitable for all gases.

2.5.4 There are no zinc based alloys used on this appliance in contact with water or in any way that may affect the safe operation of the appliance.

2.5.5 Thermal insulation does:
(a) not contaminate food or water.
(b) not produce odors, fumes or corrode materials.
(c) not become ineffective or objectionable by settling, dislodgment or condensation.
(d) have protection against rodents.

2.5.6 Aluminium tubing in areas of restricted ventilation shall be provided with a protective barrier to prevent corrosion due to contact with condensation, insulation and other materials of the appliance.

2.5.7.1 Materials used in electrical construction are suitable for the application and electrical insulation is moisture resistant and has adequate mechanical & dielectric strength.

2.5.7.2 Bearing of motors, blowers or fans shall be of a type suitable for the temperatures to which they are subjected in normal operation.

2.5.8 Materials used comply with the following, or equivalent, where applicable:
(a) Medium or higher grades of black steel pipe to AS 1074.
(b) Copper-Brazed Double Wall Low Carbon Steel Tubing (Bundyweld) to AS 1751. This shall be lead-tin coated or equivalent where corrosion protection is necessary.
(c) Welded and Cold Drawn Low Carbon Steel Tubing to AS 1450 (S.A.E.-525B).
(d) Copper Pipe to AS 1432.
(e) Stainless Steel Tubing to AS 1769.
(f) Cast Iron Fittings to AS 1832. Threads to AS 1722.1.
(g) Flanges in cast iron, carbon steel, steel alloy or copper alloy to AS 2129.
(h) Steel fittings to AS D26.
(i) Copper alloy fittings to AS D26.
(j) Copper alloy fittings to AS 3688.
(k) Copper capillary fittings to AS 3688 with silver brazing rod to AS 1167.1, Table 2, alloy classification B2 or a comparable rod.

Date 25 May, 2012

Standards&Laboratories
Electrolux Profession

This drawing contains confidential information and is the property of ELECTROLUX PROFESSIONAL Vallenoncello,Italy without whose permission it may not be copied,shown or handed to a third party or otherwise used and it is to be returned promptly upon request to the ELECTROLUX PROFESSIONAL Vallenoncello,Italy which is responsible for the drawing.

SUPERFICI IN VISTA / VISIBLE SURFACES

PIEGA SU / BEND UP

PIEGA GIU / BEND DOWN

RoHS 2011/65/EU

IL COMPONENTE DEVE ESSERE CONFORME ALLA DIRETTIVA / THE COMPONENT MUST BE COMPLIANT TO STANDARDS

CONNESSIONE DEL CAVO ACCENSIONE TRAMITE INNESTO A SPINA
(RESISTENZA A TRAZIONE: 15N)
IGNITION CABLE CONNECTION BY MEANS OF PIN
(TRACTION RESISTANCE: 15N)

ACCENDITORE (ASSENTE SU 8358735XX)
IGNITION (ABSENT FROM 8358735XX)

CONNETTORE Ø4 mm
CONNECTOR Ø4 mm

DURANTE L'UTILIZZO NON CI DEVE ESSERE INTERFERENZA TRA CAPILLARE E MANOPOLA
DURING THE USE THERE MUST BE NO INTERFERENCE BETWEEN CAPILLARY TUBE AND KNOB

COPPIA TRA ALBERINO FILETTATO E MANOPOLA: 6Nm
TORQUE BETWEEN THREAD PART AND KNOB: 6Nm

MATERIALE BULBO AISI 304
PROBE MATERIAL AISI 304

PRESA PRESSIONE GAS IN USCITA
OUTLET PRESSURE TAP

USCITA GAS LATERALE
GAS OUTLET SIDE

PRESA PRESSIONE GAS IN ENTRATA
INLET PRESSURE TAP

ENTRATA GAS LATERALE
GAS INLET SIDE

N.2 GRANI A TESTA ESAGONALE
N.2 HEXAGON SOCKET SET SCREWS
DIN 914-M4x5-45H
COPPIA DI SERRAGGIO 50±10Ncm
TORQUE 50±Ncm
BLOCCARE CON VERNICE ROSSA
LOCK WITH RED PAINT

ENTRATA GAS INFERIORE
GAS INLET BOTTOM

USCITA GAS INFERIORE
GAS OUTLET BOTTOM

Scala: 1:1
1) LA VALVOLA COD. 835875S00 HA LA TENUTA OLIO SUL CAPILLARE
VALVE CODE 835875S00 HAS THE OILTIGHT ON THE CAPILLARY

UNI ISO 7/1-R 1/4

I) Sezione C-C
Scala: 1:1

P) **TIPO A**
TYPE A
MATERIALE/MATERIAL
EN 12164
CW 617N-R400-RND A

Sezione E-E
Scala: 1:1

ADESIVO REGOLAZIONE ('F)
ADJUSTMENT STICKER ('F)

O) **TIPO B**
TYPE B
MATERIALE/MATERIAL
EN 12164
CW 617N-R400-RND A

NOTE/NOTES:

-DISEGNO RICAVATO DA CAMPIONE / DRAW FROM SAMPLE
-ATTACCO TERMOCOPPIA M-9X1/ THERMOCOUPLE THREAD M9X1
-TEMP.MAX DI ESERCIZIO / MAX AMB.TEMPERATURE: 110°C
-PRESSIONE MAX DI ESERCIZIO / MAX PRESSURE: 50 MBAR
-PROTETTE SINGOLARMENTE CON SACCHETTO PLASTICO
EACH ONE PROTECTED BY PLASTIC BAG
-TARGHETTA CARATTERISTICHE CON NUMERO DI APPROVAZ. DIN-DGW O AGA
LABEL OF CHARACTERISTICS WITH DIN-DVGW OR AGA APPROVAL NO.

APPARECCHIATURE APPLIANCES	Partnumber	CMD.MERTIK MERTIK CODE	INLET GAS SIDE(LAT)	OUTLET GAS SIDE(LAT)	INLET GAS BOTTOM(INF)	OUTLET GAS BOTTOM(INF)	LUNG. CAVO Li CABLE LENGTH Li	LUNG.CAPILLARE Lc CAPILLARY LENGTH Lc	DIA.BULBO D PROBE DIA.D	LUNG. BULBO L PROBE LENGTH L	SEDE VITE MIN. RATE SCREW SEAT	CAMPO REG.PRESS. PRESS.REG.RANGE	APPROVAZ. APPROVAL	CAMPO DI REGOLAZ. TEMP. RANGE	TARATURA NOMINALE NOMINAL CALIBRATION	TEMP.CORPO BODY TEMP.	FATTORE CORREZ. CORRECTION FACTOR	TIPO MANOPOLA KNOB TYPE
BRASIERINA BRAD PLATTE	835851302	GV30T C3A7A2K0-013	NO	Rp3/8 EN 10226-3	Rp3/8 EN 10226-3	NO	900 mm	810 mm	4 mm	73 mm	SI/YES	NO	CE	100...340°C	250°C +/-5%	60°C	1	A
FRY TOP GRIDDLE	835853004	GV30T C3A7A2K0-012	NO	Rp3/8 EN 10226-3	Rp3/8 EN 10226-3	NO	900 mm	810 mm	4 mm	73 mm	SI/YES	NO	AGA,CE	100...340°C	290°C +/-5%	80°C	1	A
FORNO M900 M900 OVEN	835859302	GV31T C1A7AGK0-003	NO	NO	Rp3/8 EN 10226-3	Rp3/8 EN 10226-3	1300 mm	810 mm	4 mm	73 mm	NO	NO	AGA,CE	100...340°C	280°C +/-5%	55°C	1	A
FORNO GRANDE BIG OVEN	835865602	GV30T C1A7A0K0-004	NO	NO	Rp3/8 EN 10226-3	Rp3/8 EN 10226-3	1550 mm	810 mm	4 mm	73 mm	SI/YES	NO	AGA,CE	100...340°C	280°C +/-5%	55°C	1	A
FRIGGITRICE M900 M900 FRYER	835859703	GV31T C5AXE2K0-003	Rp3/8 EN 10226-3	Rp3/8 EN 10226-3	Rp3/8 EN 10226-3	Rp3/8 EN 10226-3	900 mm	810 mm	4 mm	165 mm	NO	AIR RATE 1.6 M3/H P=10.5MBAR	CE	110...190°C	180°C +/-5%	60°C	0.5	A
BAGNOMARIA M900 M900 BAIN MARIE	835866103	GV31T C2ALA2K0-001	Rp3/8 EN 10226-3	Rp3/8 EN 10226-3	NO	NO	900 mm	1350 mm	6 mm	113 mm	NO	NO	CE	20...90°C	90°C +/-5%	40°C	0.33	A
FRY TOP/GRIDDLE USA (*NO INTERLOCK)	835873503	GV31T C34QA0K0-004	NO	Rp3/8 EN 10226-3	Rp3/8 EN 10226-3	NO	NO IGNITION	1350 mm	4 mm	103 mm	NO	NO	AGA,CE	66...260°C	270°C +/-5%	60°C	0.6	B
FRY TOP 1200 GRIDDLE 1200	835875T02	GV31T C3A0A1K0-001	NO	Rp3/8 EN 10226-3	Rp3/8 EN 10226-3	NO	550 mm	1350 mm	4 mm	103 mm	NO	NO	AGA,CE	66...260°C	270°C +/-5%	60°C	0.6	B
FRIGGITRICE/FRYER USA(1) (NO INTERLOCK)	835875S02	GV30T E5AYA2K0-002	Rp3/8 EN 10226-3	Rp3/8 EN 10226-3	Rp3/8 EN 10226-3	Rp3/8 EN 10226-3	900 mm	1100 mm	5 mm	160 mm	NO	NO	AGA,CE	110...190°C	180°C +/-5%	60°C	0.33	B
FORNO/OVEN USA (NO INTERLOCK)	835878400	GV30T C6AZA0K0-001	NO	Rp3/8 EN 10226-3	Rp3/8 EN 10226-3	Rp3/8 EN 10226-3	NO IGNITION	1500 mm	4 mm	86mm	NO	NO	AGA,CE	100...340°C	280°C +/-5%	55°C	0.8	B
FRY TOP-GRIDDLE CE USA (*NO INTERLOCK)	835879400	GV30T C3A0A0K0-001	NO	Rp3/8 EN 10226-3	Rp3/8 EN 10226-3	NO	NO IGNITION	1350 mm	4 mm	103 mm	NO	NO	AGA,CE	96...260°C	290°C +/-5%	60°C	0.6	B

REV				
Q	03	INTRODOTTA GUAINA CON CALZETTONE (TIPO B) E ADESIVO QUO.835879402	Cauccl.	05/12/2014
N	02	INTRODOTTA MANOPOLA CON TACCHE DI RIFERIMENTO (TIPO A) C.I.	Cauccl.	27/06/2012
M	01	AGGIUNTO COD.835875T00 E 835875S00 E TOLTA LOCTITE	00150	Cauccl.	13/06/2012
K	01	SOS.835873XX (O 5896SP, Tmax=270°CE NO VITE MIN.) C.I.	00132	Cauccl.	18/12/2008
J	01	AGGIORNATO CORRISPONDENZA CON CODICI MERTIK C.I.	00108	Cauccl.	01/09/2008
Q	03	AGGIUNTO CODICE 835879400		Cauccl.	04/12/2014
P	03	INX.COD.835878400(O.ALLINEATO RATTURA FINE GUAINA) SOSTITUITA TIPO A C.I.		Cauccl.	08/11/2014
REV		MODIFICATIONS	REQ.	SIGN	DATE	APPR.

GENERAL TOLERANCES UNI EN 22768-1/2

MATERIAL:

TREATMENT:

SUPPLY SPECIFICATIONS Nr

DERIVED FROM Nr

REPLACES Nr

ESENTE DA BAVE E SPIGOLI TAGLIENTI / FREE OF BURRS AND CUTTING EDGES

SCALE 1/1

DATE 18/12/2008

DRW MODULAR

CHD

APPR. S.Amadei

DESCRIPTION PROSPETTO VALVOLE GAS MERTIK

Electrolux Professional Modular Cooking

EUROPEAN METHOD

PART Nr 599898703 REV. Q

CODICE	DIAMETRO	APPARECCH.
516846200	0.70 ±0.010	
516806200	0.75	HM/GD
516820700	0.80	MFR/G 380
516802300	0.85	HM/G
516806000	0.90	HM/GD
514833500	0.95 ±0.010	RCF/GD
514853100	1.00 ±0.015	PMG600G
516814900	1.05	RCF/G
514829900	1.10	RCF/G
516843500	1.15	MFR/G14
516843600	1.20	
516802200	1.25	HM/G
514879700	1.30	
516833400	1.35	
516833600	1.40	
514862700	1.45	HM/G
514899100	1.50	
516823400	1.55	FCF/G
516814800	1.60	RCF/G
514830000	1.65	RCF/G
514830900	1.70	PMG600
516823500	1.75	FCF/G
514833600	1.80	RCF/GD
516843700	1.85	
514831100	1.90	FCF/G20
516821700	1.95	FCF/G20 CE
516843800	2.00	
514899200	2.05	
514860900	2.10	FCV/G10
514856400	2.15	FCV/G10
514848900	2.20	FCF/G40
514862800	2.25	FCV/G6
516818900	2.30	FCV/G6 L4 N.G.
516833500	2.35	
516843900	2.40	
516806100	2.45	HM/GD
514879800	2.50	
516832200	2.55	FCF/G20 2/1
516806300	2.60	HM/GD
516844000	2.65	
516839600	2.70	
516821500	2.75	
516839700	2.80	
516839800	2.85	
516844100	2.90 ±0.015	

CODICE	DIAMETRO	APPARECCH.
516833100	2.95 ±0.015	MPD/G 240
514831200	3.00 ±0.020	FCF/G20
516844200	3.05	
514833700	3.10	RCF/GD
516844300	3.15	
514831000	3.20	PMG600
514869900	3.25	FCV/G10D
514853200	3.30	PMG600D
516839900	3.35	
514830100	3.40	RCF/G
516844400	3.45	
514871600	3.50	RCF/GES
516832500	3.55	FCF/G20 1/1
514870000	3.60	FCV/G10D
516844500	3.65	
516844600	3.70	
516821800	3.75	FCF/G40 CE
514853000	3.80	FCF/G40
516840000	3.85	
516844700	3.90	
516844800	3.95	
514865000	4.00	FCF/G40D
516832300	4.10	FCF/G20 2/1
516844900	4.20	
516833700	4.30	
516845000	4.40	
516832400	4.50	FCF/G20 2/1
516845100	4.60	
516824400	4.70	
514862900	4.80	
516845200	4.90	
514872600	5.00	FCV/G6
516845300	5.10	
516845400	5.20	
516845500	5.30	
516845600	5.40	
514879900	5.50	
516845700	5.60	
516840100	5.65	
516845800	5.70	
516845900	5.80	
516846000	5.90	
514880000	6.00	
514831300	6.25	FCF/G20
516840200	6.50	
516846100	6.90	
514836100	7.00 ±0.020	FCF/G20

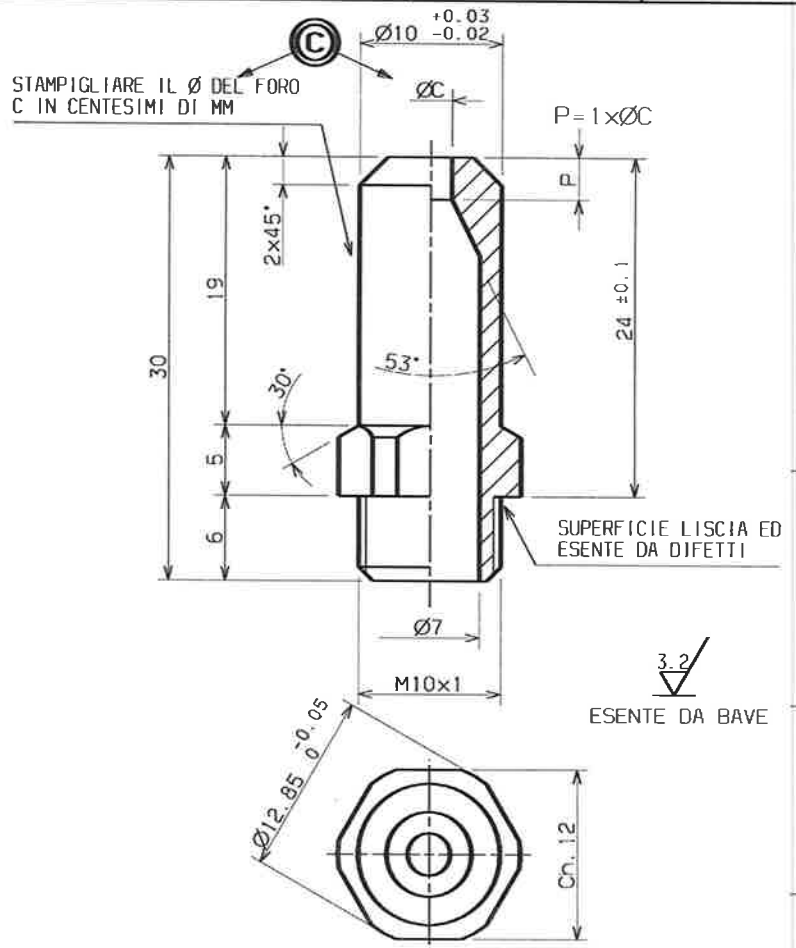

RIF.	MODIFICHE	DATA	FIRMA
7C012	AGG. UGELLO D.2.95. C.I.	08.07.97	FOGOLIN
7C051	AGG. UGELLI D.1.35-D.2.35-D.4.30 C.I.	24.07.97	GALLINELLI
7F087	AGG. UGELLI D.2.55-D.3.55-D.4.10-D.4.50. C.I.	20.10.97	MARCHESIN
7F087	AGG. UGELLI D.1.40. C.I.	08.04.98	MARCHESIN
8C023	AGG. UGELLI D.5.65.2.4.2.8.2.85.3.35.3.85 C.I	09.06.98	BRESIN
9C074	AGG. UGELLI D.1.15. C.I.	20.07.99	FRANCHI
0C048	COMPLETATO LISTA CODICI C.I.	08.11.00	FRANCHI
00543	SOSTITUITO COD. UGELLO 6.90 C.I.	10.03.06	FRANCHI

TOLLERANZE GENERALI
LUNGHEZZE ½IT14 UNI6307 | ANGOLI ±15'
SCALA 3:1
CAPITOLATO
SOST. SCE IL
SOST. TO RICL. TO DAL
DATA 11.12.92
DISEGNATO FRANCHI R.
CONTROLLATO

MATERIALE P Cu Zn 40 Pb2 UNI 5705
STATO

DENOMINAZIONE
PROSPETTO UGELLI
POLIDORO TIPO A-...-N

Zanussi Grandi Impianti spa
- ITALIA -

MOD. APPARECCH. GAS
CODICE 599816501

CICLO
DATA
SVILUPPO O PESO
TEORICO
PRATICO

VARIANTI RISPETTO AL DISEGNO BASE
MODELLO O FAMIGLIA
CODICE DERIVATO

LA ZANUSSI GRANDI IMPIANTI S.P.A. SI RISERVA A TERMINI DI LEGGE LA PROPRIETA' DEL PRESENTE DISEGNO CON DIVIETO DI RIPRODURLO O DIVULGARLO SENZA SUA PREVIA AUTORIZZAZIONE

APPROVED: PARONI - 10 Mar 2006

This drawing contains confidential information and is the property of ELECTROLUX PROFESSIONAL Vallenoncello,Italy without whose permission it may not be copied,shown or handed to a third party or otherwise used and it is to be returned promptly upon request to the ELECTROLUX PROFESSIONAL Vallenoncello,Italy which is responsible for the drawing.

SUPERFICI IN VISTA
VISIBLE SURFACES

RoHS 2002/95/EC

IL COMPONENTE DEVE ESSERE CONFORME ALLA DIRETTIVA
THE COMPONENT MUST BE COMPLIANT TO STANDARDS

Vista in sezione A-A
Scala: 2:3

AISI 430 sp. 8/10
cod.145.0088.00

Venturi verticale
Lam. zincata sp. 5/10
cod. 147.0018.00

Nastro 130x0.5
AISI 441

AISI 430 5/10
cod. 145.0003.00

Lettere AZ
punzonate
H = 6 mm

Marcare:
POLIDORO SCHIO ITALIA
..... (anno)

Distribuzione
lam. zincata sp. 6/10
con 8 fori Ø 5 ovalizzati
cod. 146.0004.00

Tubo Fe 35 Ø10 x 1
cod.

AISI 430 sp.20/10
cod.143.0037.00

fiamma 544 17 colpi foranti matrice 68-69

Flangia venturi AISI 430 sp. 8/10
cod. 145.0088.00

Vista in sezione B-B
Scala 1:1

GENERAL TOLERANCES UNI EN 22768-1/2 m K

REV	MODIFICATIONS	REQ.	SIGN	DATE

MATERIAL:
TREATMENT:
SUPPLY SPECIFICATIONS Nr
DERIVED FROM Nr
REPLACES Nr

ESENTE DA BAVE E SPIGOLI TAGLIENTI
FREE OF BURRS AND CUTTING EDGES

Electrolux Professional
Modular Cooking

DESCRIPTION BRUCIATORE FORNO ST. COMPACT

EUROPEAN METHOD

PART Nr 855899A00 REV B

SCALE 1:1,5
DATE 18/12/2008
DRN MODULAR
CHD
APPR E.Marzinotto

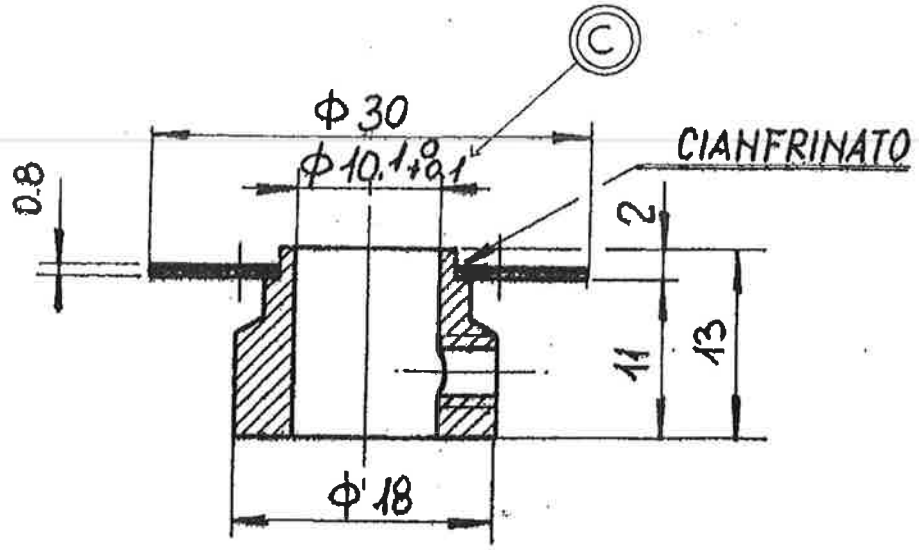

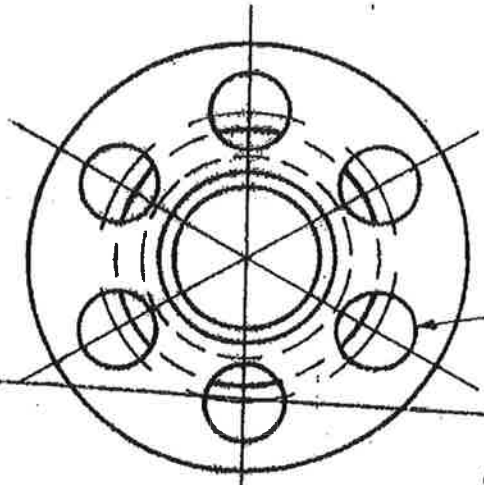

D

Senza bave

NOVEMBRE 20[illegible]

N° RAPP. 06AC00310

POS.	DENOMINAZIONE	CODICE COMPONENTE	Q.TÀ
2	FLANGIA GAS TESTING LAB	5068.333.01	1
1	BOCCOLA	5148.298.01	1

RIF.	MODIFICHE	DATA	FIRMA
01	Identif. caratt.	25.7.91	Venier

TOLLERANZE GENERALI: LUNGHEZZE ±IT14 UNI 6397; ANGOLI ±30'

SCALA 2:1

CAPITOLATO

SOST.SCE IL

SOST.TO DAL / RICA.TO

DATA 2.6.83

DISEGNATO

CONTROLLATO

MATERIALE

STATO

DENOMINAZIONE ASS. AREATORE

Zanussi Grandi Impianti spa
– ITALIA –

MOD. RCF/G R 702

CODICE 8308.271.01

CICLO

SVILUPPO O PESO
TEORICO
PRATICO

VARIANTI RISPETTO AL DISEGNO BASE

MODELLO O FAMIGLIA

CODICE DERIVATO

LA ZANUSSI GRANDI IMPIANTI S.P.A. SI RISERVA, A TERMINI DI LEGGE, LA PROPRIETÀ DEL PRESENTE DISEGNO CON DIVIETO DI RIPRODURLO O DIVULGARLO SENZA SUA PREVIA AUTORIZZAZIONE

STAMP.	COD. ZANUSSI	COD. SIT
25	8308.312.01	0.977.123
30	8308.239.00	0.977.122
35	8308.215.00	0.977.125
41	8308.238.01	0.977.118
51	8308.237.00	0.977.119
75	8308.240.01	0.977.121
62	8308.216.00	

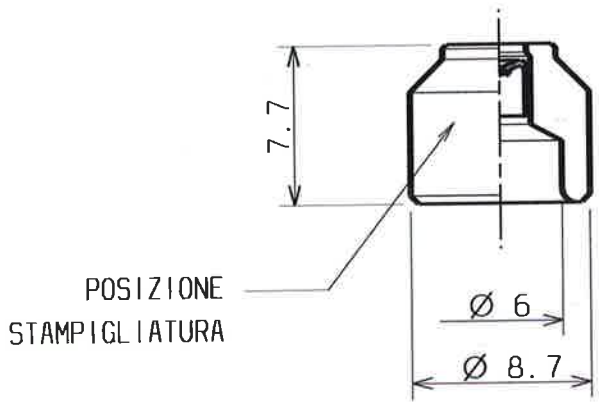

CICLO

DATA

SVILUPPO O PESO
TEORICO
PRATICO

VARIANTI RISPETTO AL DISEGNO BASE

MODELLO O FAMIGLIA

CODICE DERIVATO

POS.	DENOMINAZIONE	CODICE COMPONENTE	Q.TA'

RIF.	MODIFICHE	DATA	FIRMA
	AGGIUNTO 2 CODICI C.I.	19.05.98	BRESIN

TOLLERANZE GENERALI
LUNGHEZZE ±½IT* UNI6387 ANGOLI ±*
SCALA 3:1
CAPITOLATO
SOST.SCE IL
SOST.TO RICA.TO DAL
DATA 24.07.97
DISEGNATO FOGOLIN
CONTROLLATO

MATERIALE
STATO
DENOMINAZIONE PROSPETTO UGELLI PILOTA
SIT 0.160
MOD.
CODICE 599885600

Electrolux Zanussi G.I.
- ITALIA -

LA ZANUSSI GRANDI IMPIANTI S.P.A. SI RISERVA A TERMINI DI LEGGE, LA PROPRIETA' DEL PRESENTE DISEGNO CON DIVIETO DI RIPRODURLO O DIVULGARLO SENZA SUA PREVIA AUTORIZZAZIONE

1 cm

APPROVED: MORO - 13 Mar 2000

This drawing contains confidential information and is the property of ELECTROLUX PROFESSIONAL Vallenoncello,Italy without whose permission it may not be copied,shown or handed to a third party or otherwise used and it is to be returned promptly upon request to the ELECTROLUX PROFESSIONAL Vallenoncello,Italy which is responsible for the drawing.

SUPERFICI IN VISTA
VISIBLE SURFACES

PIEGA SU
BEND UP

PIEGA GIU
BEND DOWN

RoHS 2002/95/EC

IL COMPONENTE DEVE ESSERE CONFORME ALLA DIRETTIVA
THE COMPONENT MUST BE COMPLIANT TO STANDARDS

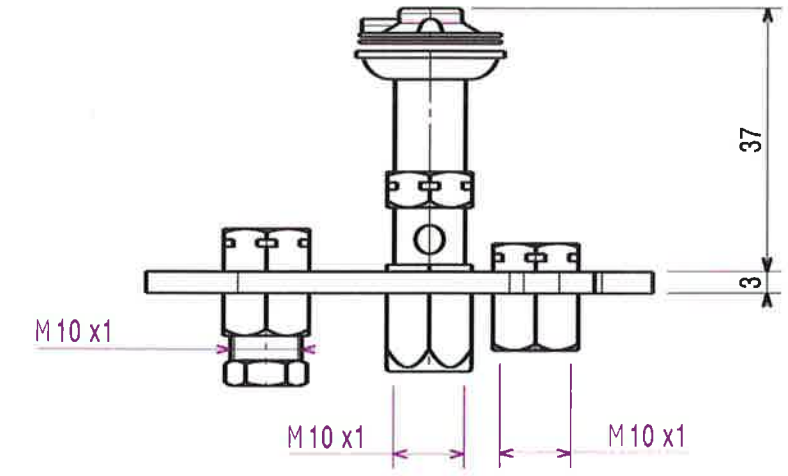

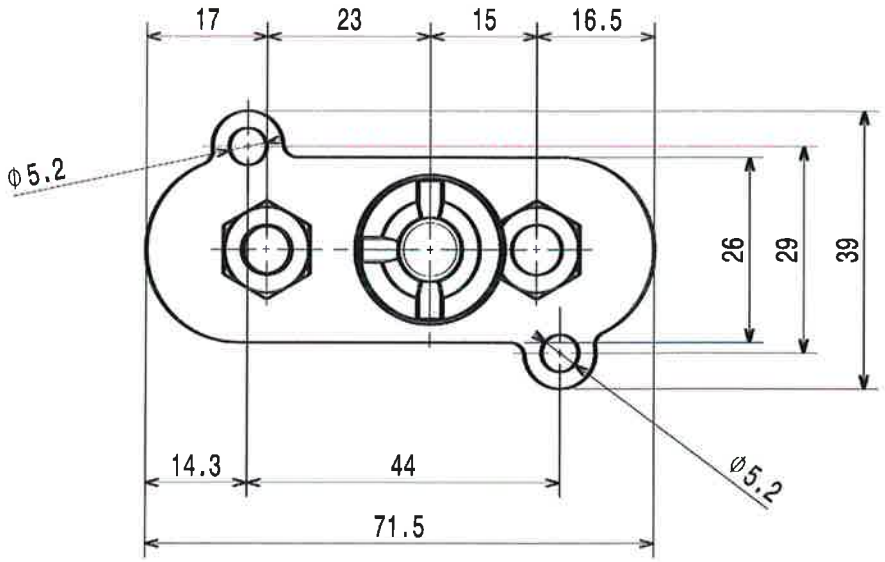

REV	I.R.	MODIFICATIONS	REQ.	SIGN	DATE

GENERAL TOLERANCES UNI EN 22768-1/2 m K

SCALE
DATE 04/06/2010
DRN S.Fogolin
CHD
APPR E.Marzinotto

MATERIAL:
TREATMENT:
SUPPLY SPECIFICATIONS Nr | DERIVED FROM Nr | REPLACES Nr

ESENTE DA BAVE E SPIGOLI TAGLIENTI
FREE OF BURRS AND CUTTING EDGES 1 A

DESCRIPTION PILOTA A 3 FIAMME SIT 0160032

Electrolux Professional
Modular Cooking

EUROPEAN METHOD

PART Nr 83089F200 REV. A

A4

This drawing contains confidential information and is the property of ELECTROLUX PROFESSIONAL Vallenoncello,Italy without whose permission it may not be copied,shown or handed to a third party or otherwise used and it is to be returned promptly upon request to the ELECTROLUX PROFESSIONAL Vallenoncello,Italy which is responsible for the drawing.

SUPERFICI IN VISTA
VISIBLE SURFACES

PIEGA SU
BEND UP

PIEGA GIU
BEND DOWN

RoHS 2002/95/EC

IL COMPONENTE DEVE ESSERE CONFORME ALLA DIRETTIVA
THE COMPONENT MUST BE COMPLIANT TO STANDARDS

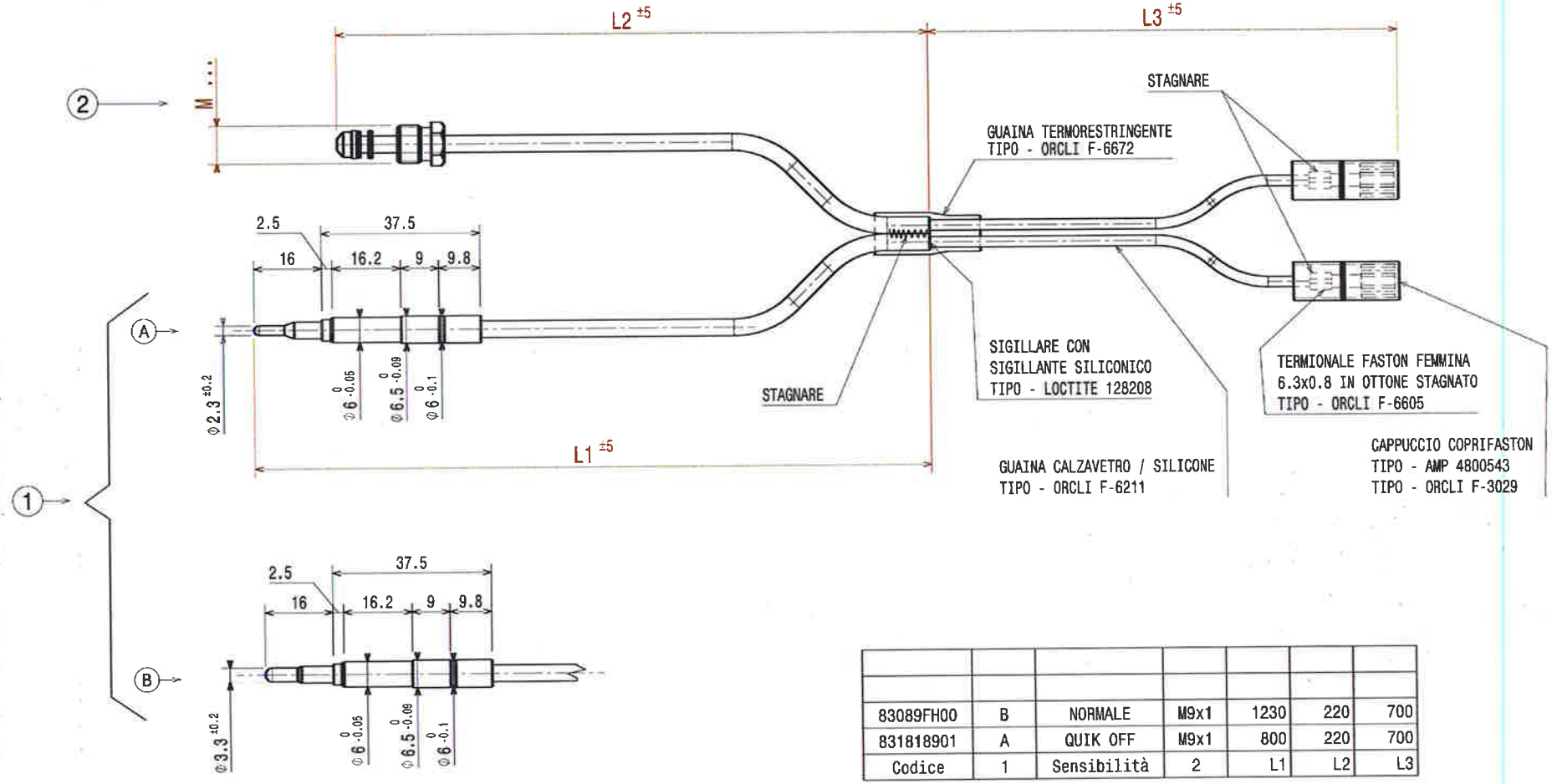

83089FH00	B	NORMALE	M9x1	1230	220	700
831818901	A	QUIK OFF	M9x1	800	220	700
Codice	1	Sensibilità	2	L1	L2	L3

QUIK OFF	≤ 6 SECONDI	≤ 30 SECONDI
FAST ON	≤ 3 SECONDI	30/60 SECONDI
MORMALE	≤ 6 SECONDI	30/60 SECONDI
SENSIBILITA'	T ACCENSIONE	T SPEGNIMENTO

GENERAL TOLERANCES UNI EN 22768-1/2 m K

REV	I.R.	MODIFICATIONS	REQ.	SIGN	DATE

SCALE
DATE 23/11/2010
DRN S.Fogolin
CHD
APPR E.Marzinotto

MATERIAL:
TREATMENT:
SUPPLY SPECIFICATIONS Nr
DERIVED FROM Nr
REPLACES Nr

ESENTE DA BAVE E SPIGOLI TAGLIENTI
FREE OF BURRS AND CUTTING EDGES
1 A

DESCRIPTION PROSPETTO TERMOCOPPIE INTERROTTE

Electrolux Professional
Modular Cooking

EUROPEAN METHOD
PART Nr 59989MZ00 REV. A

SORT ASCENDING

CONTACT RATINGS

POS	ELUX COD.	EGO COD.	SET. (°C)	CORREC. FACTOR "C" (K/K)	MAX PROBE TEMPER. (°C)	PROBE TYPE	LB (mm)	LB1 (mm)	Ø (mm)	LG1 (mm)	LG2 (mm)	LC (mm)	11 / 14 / 12		21 / 24 / 22		31 / 34 / 32	
1	646814900	55.32522.480	140 $^{0}_{-15}$	0,30	260	B	50	87	6	800	-	900	20A 400V	"D"	20A 400V	"D"	20A 400V	"D"
2	646809100	55.32522.846	146 $^{0}_{-15}$	0,31	260	B	50	87	6	800	-	900	20A 400V	"D"	20A 400V	"D"	20A 400V	"D"
3	646812900	55.32529.829	150 $^{0}_{-15}$	0,51	320	B	40	74	6	1100	-	1700	-		0,5A 12V	"D"	20A 400V	"C"
4	646809400	55.32532.820	176 $^{0}_{-15}$	0,33	260	B	50	87	6	800	-	900	20A 400V	"D"	20A 400V	"D"	20A 400V	"D"
5	646809901	55.32532.824	176 $^{0}_{-15}$	0,33	260	B	50	87	6	800	-	900	0,5A 12V	"C"	0,5A 12V	"C"	0,5A 12V	"C"
6	646816600	55.32542.360	230 $^{0}_{-16}$	0,36	310	B	50	87	6	900	-	900	20A 400V	"C"	20A 400V	"C"	20A 400V	"C"
7	646816500	55.32542.836	239 $^{0}_{-16}$	0,38	370	B	50	87	6	900	-	900	-		0,5A 12V	"D"	-	
8	646807600	55.32549.805	250 $^{0}_{-18}$	0,67	320	B	40	79	6	1800	-	2000	-		0,5A 12V	"C"	-	
9	646810502	55.32549.814	255 $^{0}_{-20}$	0,43	280	B	50	87	6	800	-	900	0,5A 12V	"C"	0,5A 12V	"C"	0,5A 12V	"C"
10	646808800	55.32549.811	254 $^{0}_{-18}$	0,70	280	B	50	87	6	1600	210	2700	20A 400V	"C"	20A 400V	"C"	20A 400V	"C"
11	646808700	55.32549.816	256 $^{0}_{-20}$	0,52	320	B	50	87	6	1100	-	1300	-		0,5A 12V	"D"	-	
12	646810002	55.32542.859	259 $^{0}_{-20}$	0,39	300	B	50	87	6	900	-	900	20A 400V	"C"	20A 400V	"C"	20A 400V	"C"
13	646810102	55.32542.858	259 $^{0}_{-20}$	0,39	300	B	50	87	6	900	-	900	-		0,5A 12V	"D"	-	
14	646811200	55.32552.814	281 $^{0}_{-20}$	0,45	330	B	50	87	6	900	-	900	20A 400V	"C"	20A 400V	"C"	20A 400V	"C"
15	646807101	55.32562.816	338 $^{0}_{-20}$	0,48	370	T	16	6	11	900	-	900	-		20A 400V	"C"	-	
16	646812100	55.32564.040	350 $^{0}_{-24}$	0,62	370	B	40	79	6	800	-	1500	20A 400V	"C"	20A 400V	"C"	20A 400V	"C"
17	646812200	55.32562.847	357 $^{0}_{-22}$	0,52	370	TB	53	39	6	900	-	900	0,5A 12V	"D"			20A 400V	"C"
18	646807700	55.32574.801	360 $^{0}_{-20}$	0,64	370	B	40	79	6	1500	-	1500	-		0,5A 12V	"D"	-	
19	646808102	55.32562.806	360 $^{0}_{-25}$	0,51	370	B	88	120	4	450	450	900	20A 400V	"C"	0,5A 12V	"C"	20A 400V	"C"
20	646808600	55.32573.801	360 $^{0}_{-20}$	0,55	370	B	40	79	6	1200		1200	0,5A 12V	"C"	20A 400V	"C"	0,5A 12V	"C"

N.B.

MIN. PROBE TEMPERATURE:-10°C

MAX. BODY TEMPERATURE:125°C

BODY TEMPERATURE FOR THE TARATURE "TC"=20°C

"TL": BODY WORKING TEMPERATURE

TERMAL DRIFT "-DT"=(TL-TC)xC

POSITIVE SAFETY THERMOSTAT,IT OPENS THE CONTACTS IN CAPILLARY BREAKING EVENTS

THE CONTACTS WITH RATING 0.5A 12V~ MUST BE GOLD-PLATED WITH MIN.THICKNESS OF MATERIAL 3µm

MIN. FOLDING RADIUS OF CAPILLARY:5mm

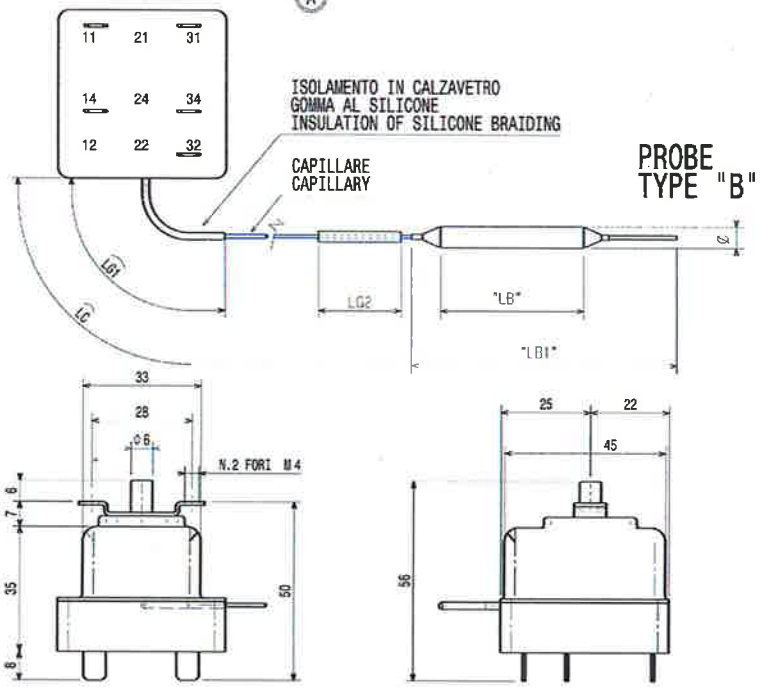

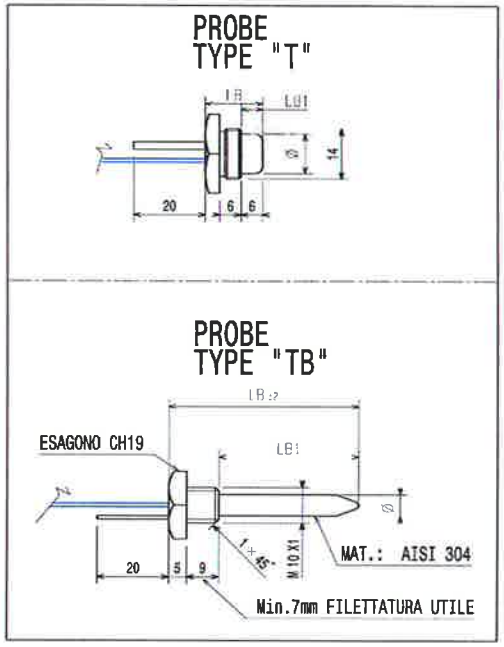

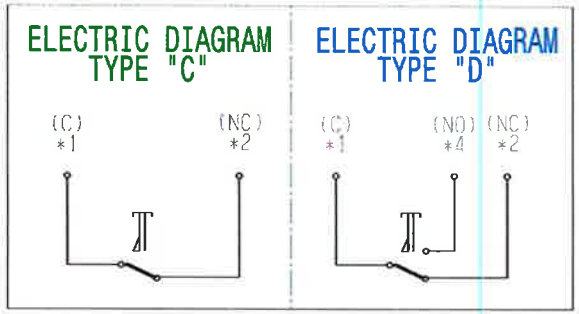

C	00	CORRETTO VALORE DI TARATURA COD. 646807101	0472703	F.TURCO	23/09/2011
B	00	RIFATTO DISEGNO	-	F.TURCO	31/05/2011
A	00	RIFATTO DIS., AGGIUNTO MAT. SELBO TIPO "B" C.I.	-	FRANCHI R.	19/05/2010
REV.		MODIFICATIONS	REQ.	SIGN	DATE

GENERAL TOLERANCES (UNI EN 22768-1/2)

MATERIAL:

TREATMENT:

SUPPLY SPECIFICATIONS Nr | DERIVED FROM Nr | REPLACES Nr

ESENTE DA BAVE E SPIGOLI TAGLIENTI
FREE OF BURRS AND CUTTING EDGES

DESCRIPTION: PROSPETTO LIMITATORI TEMPERATURA

Electrolux Professional
Modular Cooking

EUROPEAN METHOD

PART Nr 594800000 REV. C

SCALE 1
DATE 19/05/2010
DRN R.Franchi
CHD G.F.Cum
APPR R.Furlanetto

SUPERFICI IN VISTA
VISIBLE SURFACES

PIEGA SU
BEND UP
PIEGA GIU
BEND DOWN

RoHS 2002/95/EC

IL COMPONENTE DEVE ESSERE CONFORME ALLA DIRETTIVA
THE COMPONENT MUST BE COMPLIANT TO STANDARDS

This drawing contains confidential information and is the property of ELECTROLUX PROFESSIONAL Vallenoncello,Italy without whose permission it may not be copied,shown or handed to a third party or otherwise used and it is to be returned promptly upon request to the ELECTROLUX PROFESSIONAL Vallenoncello,Italy which is responsible for the drawing.

This drawing contains confidential information and is the property of ELECTROLUX PROFESSIONAL Vallenoncello,Italy without whose permission on it may not be copied,shown or handed to a third party or otherwise used and it is to be returned promptly upon request to the ELECTROLUX PROFESSIONAL Vallenoncello,Italy which is responsible for the drawing.

Critical dimensions which must be under capability

GENERAL TOLERANCES ACCORDING TO EN 22768-1/2

LINEAR DIMENSIONS	f	m	c	v	ANGULAR DIMENSIONS	f	m	c	v	GEOMETRICAL	H	K	L
		X					X					X	

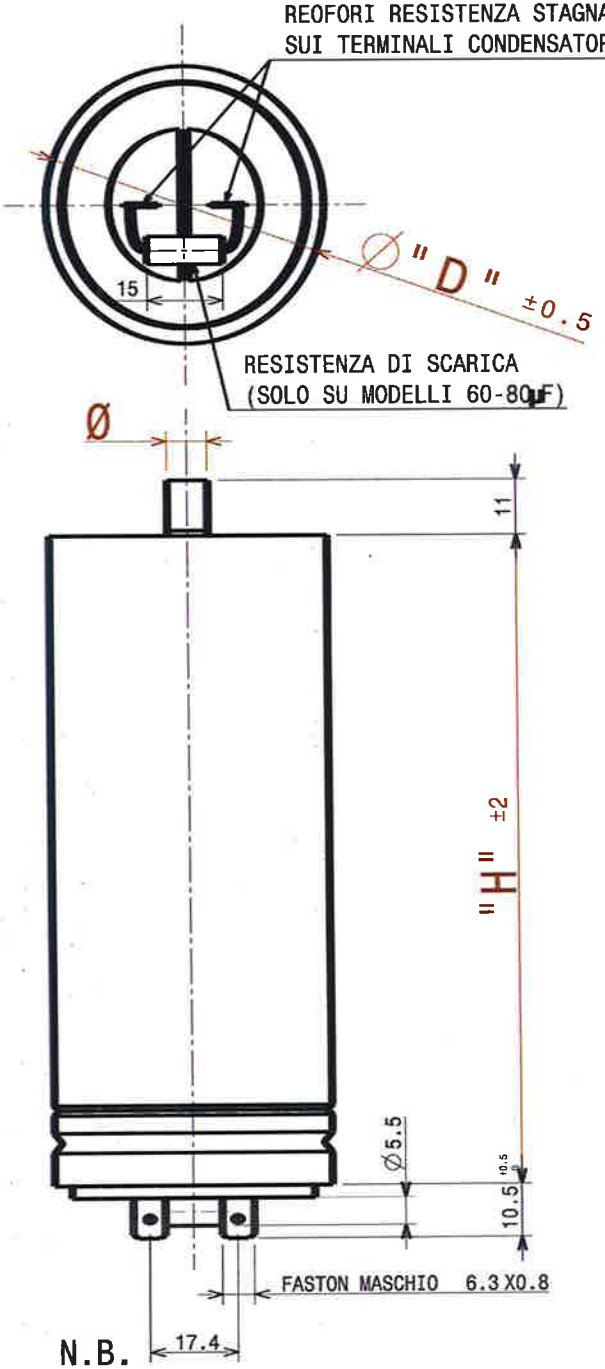

N.B.
LISTA FORNITORI ALTERNATIVI COD. 597845400

PartNumber	C (µF)	D	H	M	Ø	Approv.Req.
694806000	8	35mm	78,5mm	8mm	M8	VDE-UR-CSA
694800300	10	35mm	78,5mm	8mm	M8	VDE-UR-CSA
694604400	12,5	35mm	104mm	8mm	M8	VDE-UR-CSA
694802700	15	35mm	104mm	8mm	M8	VDE-UR-CSA
694800600	20	40mm	104mm	8mm	M8	VDE-UR-CSA
694800700	31,5	45mm	128,5mm	8mm	M8	VDE-UR-CSA
694804601	60	55mm	128,5mm	8mm	M8	UR-CSA
694802101	80	60mm	140mm	8mm	M8	UR-CSA
694605300	8	35mm	78,5mm	8mm	M8	VDE-UR-CSA

Prospetto / Design Table : 599634900 - PROSPETTO CONDENSATORI

CARATTERISTICHE ELETTRICHE

(C)

CAPACITA NOMINALE: (VEDI TABELLA)
TOLLERANZA CAPACITÁ: +5%
DIMENSIONI MAX. INGOMBRO: (VEDI TABELLA)
APPROVAZIONE: (VEDI TABELLA)
TENSIONE: min.450V
ORE LAVORO: min. 10.000h (CLASSE B)
FREQUENZA: 50/60Hz
TEMPERATURA DI FUNZIONAMENTO: DA -25 A +85 °C

CARATTERISTICHE COSTRUTTIVE

CONDENSATORE A DIELETTRICO PLASTICO AUTORIGENERABILE
CUSTODIA IN ALLUMINIO

MARCHIATURA SUL PARTICOLARE

IL PARTICOLARE DEVE RIPORTARE LE SEGUENTI MARCHIATURE INDELEBILI:
-CAPACITA'
-TOLLERANZA CAPACITA'
-Vn
-FORNITORE E MODELLO
-CLASSE DI ISOLAMENTO
-APPROVAZIONI RICHIESTE

REF	MODIFICATIONS	REQUEST	SIGN	DATE
B	RIFATTO PROSPETTO CONDENSATORI	3F009	F.T.	03/02/2006
C	TOLTI RIFER. A FORNITORI SBAGLIATI E/O SUPERATI COD.INV.	-	F.T.	07/07/2007
D	INTRODOTTE RESISTENZE DI SCARICA CONDENSATORI AOSQ GAS USA	F00083	DDM	19/07/2007
E	AGGIUNTO MODELLO 8µF	-	F.T.	17/12/2007

MATERIAL -
TREATMENT -
DESIGN USERS -

Electrolux Professional

SCALE 1:1
DATE
DRN
CHD Turco
APPR
REPLACES No -
DERIVED FROM No -
SUPPLY SPECIFICATIONS No 1
EUROPEAN METHOD
DESIGN OWNER ITC_PD

TITLE PROSPETTO CONDENSATORI
MODEL -
NUMBER 599634900
REV e.00

ESENTE DA BAVE E SPIGOLI TAGLIENTI
FREE OF BURRS AND CUTTING EDGES

IL COMPONENTE NON DEVE CONTENERE LE SOSTANZE SPECIFICATE NELL "2002/95/EC"
THE COMPONENT MUST BE FREE FROM SUBSTANCES LISTED IN "2002/95/EC"

A3

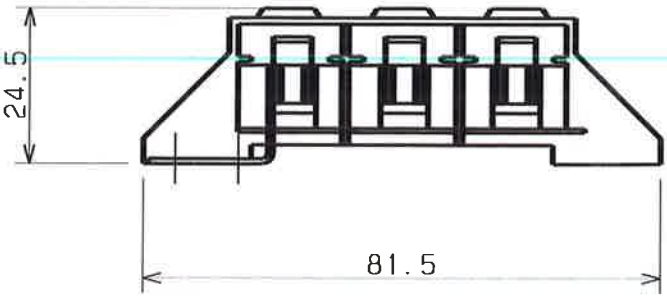

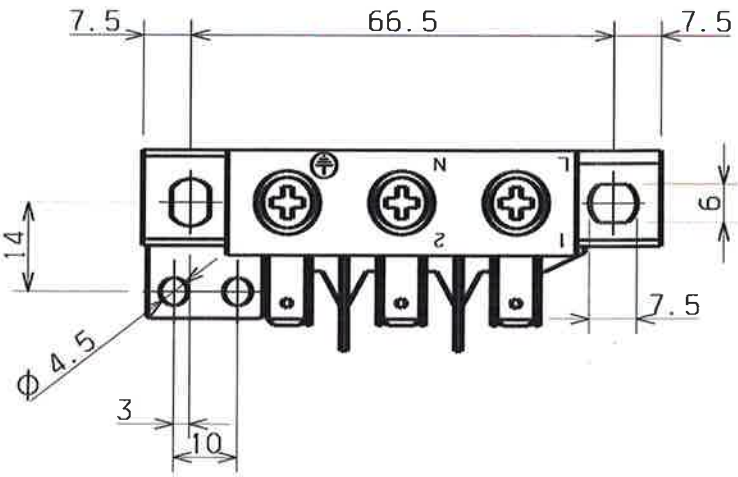

KEMA KEUR (S) (F1) (D) (N) (+S)

(B) COSTRUTTORE: ELETTRO GIBI
SEZIONE MIN/MAX CON CAVO FLESSIBILE: 0.75/6MM^2
PORTATA: 40A - 450V
MATERIALE: POLIAMMIDE 6.6 AUTOESTINGUENTE,
PARTI METALLICHE ACC. ZINCATO PASSIVATO.
TEMPERATURA ESERCIZIO: IN CONTINUO 150°C, PER 1 ORA 200°C.

POS.	DENOMINAZIONE	CODICE COMPONENTE	Q.TA'

RIF.	MODIFICHE	DATA	FIRMA
5C055	-A- AGGIUNTO QUOTE C.I.	21.04.95	GALLINELLI

TOLLERANZE GENERALI
LUNGHEZZE: ±½IT* UNI6387 — ANGOLI: ±*

SCALA 1:1
CAPITOLATO .
SOST. SCE IL .
SOST. TO RICA. TO DAL .
DATA 01.03.93
DISEGNATO CIGANA
CONTROLLATO .

MATERIALE .
STATO .

DENOMINAZIONE
MORSETTIERA DI ALIMENTAZIONE
TIPO FV 110B

Electrolux Zanussi G.I.
- ITALIA -

MOD. .
CODICE 639804900

CICLO
DATA
SVILUPPO O PESO
TEORICO
PRATICO

VARIANTI RISPETTO AL DISEGNO BASE
MODELLO O FAMIGLIA
CODICE DERIVATO

LA ZANUSSI GRANDI IMPIANTI S.P.A. SI RISERVA A TERMINI DI LEGGE, LA PROPRIETA' DEL PRESENTE DISEGNO CON DIVIETO DI RIPRODURLO O DIVULGARLO SENZA SUA PREVIA AUTORIZZAZIONE

1 cm

APPROVED: ITCFURRI - 23 Mar 2006

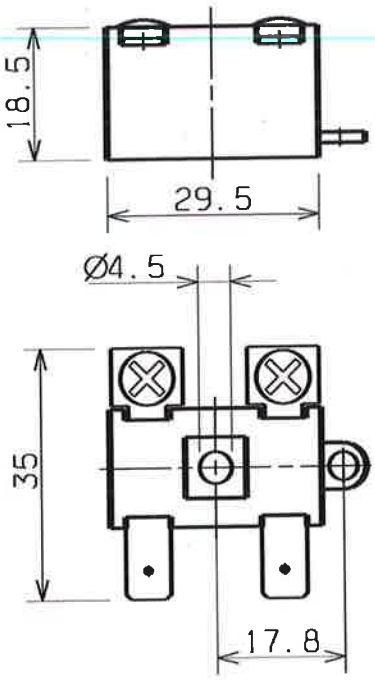

COSTRUTTORE	:ELETTROGIBI
TIPO	:FV58
NR POLI	:2
MARCATURA	:L N
PORTATA	:16A/380V-4MM²
MATERIALE	:POLIAMIDE6.6 CARICATO VETRO, AUTOESTINGUENTE (CEI23-20, UL 94V0, IEC695-2-1)
TEMPERATURA MAX.	:150°C
VITI	:M4X6.5
FASTON	:6.3X0.8MM
FORO FISSAGGIO	:Ø 4.2

RCC
N° ___ ___ ___
DEL ___ ___ ___
FORNITORE

POS.	DENOMINAZIONE	CODICE COMPONENTE	Q.TA'

RIF.	MODIFICHE	DATA	FIRMA

TOLLERANZE GENERALI
LUNGHEZZE: ±½ IT ___ UNI 6387 — ANGOLI: ± ___
SCALA 1/1
CAPITOLATO
SOST. SCE IL
SOST. TO RICA. TO DAL
DATA 21/8/90
DISEGNATO R. ZAGO
CONTROLLATO

MATERIALE
STATO
DENOMINAZIONE
MORSETTIERA ELETTROGIBI
FV58

Electrolux Zanussi G.I.
- ITALIA -

MOD. FCVM/E62

CODICE 639805100

1 cm

VARIANTI RISPETTO AL DISEGNO BASE

MODELLO O FAMIGLIA

CODICE DERIVATO

CICLO

DATA

SVILUPPO O PESO
TEORICO ___ ___ ___
PRATICO ___ ___ ___

LA ZANUSSI GRANDI IMPIANTI S.P.A. SI RISERVA A TERMINI DI LEGGE, LA PROPRIETA' DEL PRESENTE DISEGNO CON DIVIETO DI RIPRODURLO O DIVULGARLO SENZA SUA PREVIA AUTORIZZAZIONE

APPROVED: TREVISAN - 24 Mar 1999

CICLO

DATA

SVILUPPO O PESO

TEORICO

PRATICO

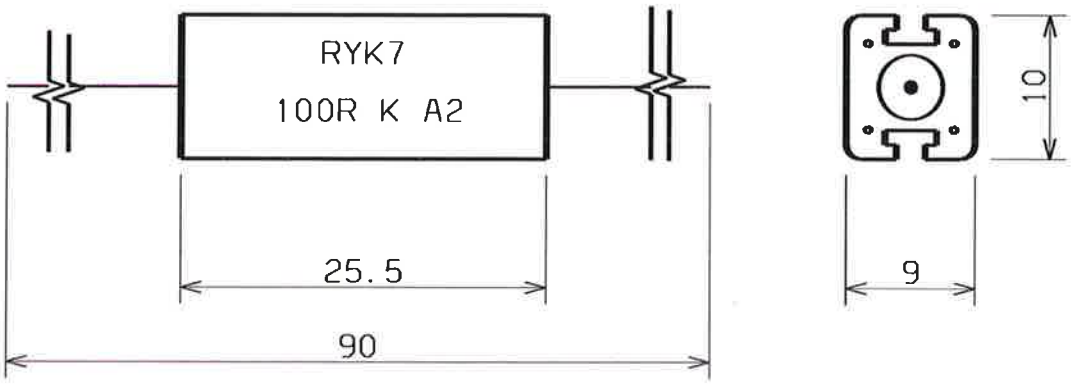

COSTRUTTORE: RECO

TIPO: RYK7 100R K A2

RESISTENZA: 100 Ω

R.C.C.

N°

DEL

FORNITORE

VARIANTI RISPETTO AL DISEGNO BASE

MODELLO O FAMIGLIA

CODICE DERIVATO

POS.	DENOMINAZIONE	CODICE COMPONENTE	Q.TA'

RIF.	MODIFICHE	DATA	FIRMA

TOLLERANZE GENERALI

LUNGHEZZE: ±½ IT * UNI6387 — ANGOLI: ± *

SCALA 2/1

CAPITOLATO

SOST. SCE IL

SOST. TO RICA. TO DAL

DATA 30/8/90

DISEGNATO R. ZAGO

CONTROLLATO

MATERIALE

STATO

DENOMINAZIONE

RESISTENZA 100Ω

RECO RYK7 100R

Electrolux Zanussi G. I.
- ITALIA -

MOD. FCVM/E62

CODICE 617813201

1 cm

LA ZANUSSI GRANDI IMPIANTI S.P.A. SI RISERVA A TERMINI DI LEGGE, LA PROPRIETA' DEL PRESENTE DISEGNO CON DIVIETO DI RIPRODURLO O DIVULGARLO SENZA SUA PREVIA AUTORIZZAZIONE

APPROVED: TREVISAN - 15 Mar 1999

CONNETTORE AMP MATE-N-LOK 6 VIE FEMMINA AMPI-480705
AMP MATE-N-LOK CONNECTOR 6 POLES FEMALE AMPI-480705

TERMINALI MATE-N-LOK-FEMMINA AMP 350536
MATE-N-LOK FEMALE LEADS AMP 350536

GUAINA IN CALZAVETRO
LUNGHEZZA=100mm

GLASS BRAIDING SHEATH
LENGHT=100mm

RISPETTARE IL SENSO DI ROTAZIONE SIA IN MONOFASE CHE TRIFASE
GUARANTEE THE RIGHT ROTATION BOTH IN ONE PHASE AND THREE PHASES

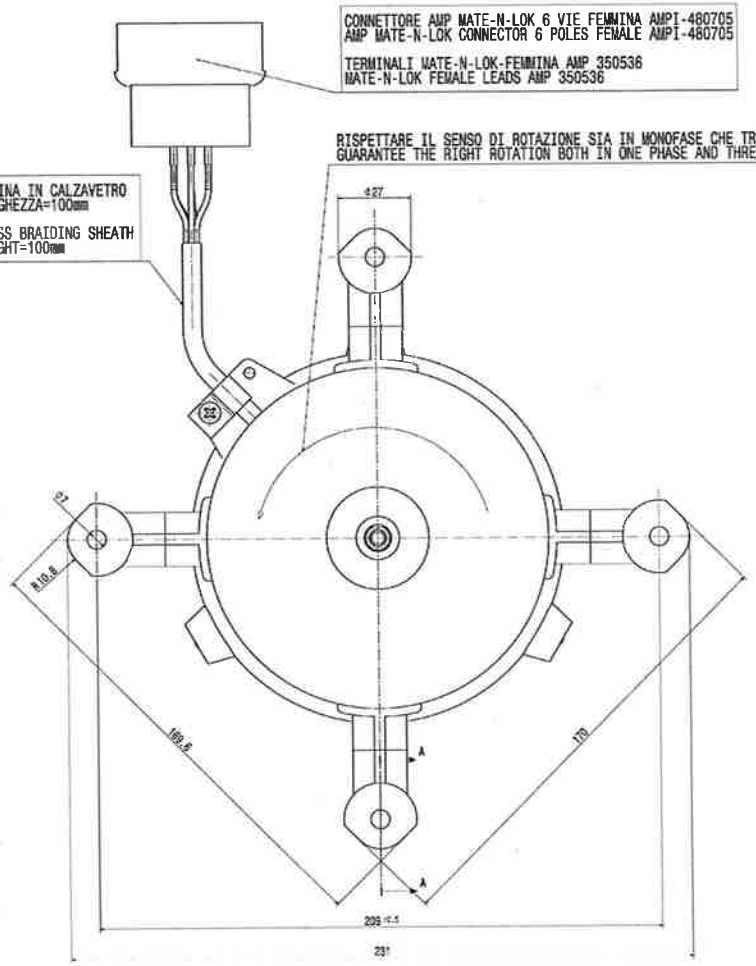

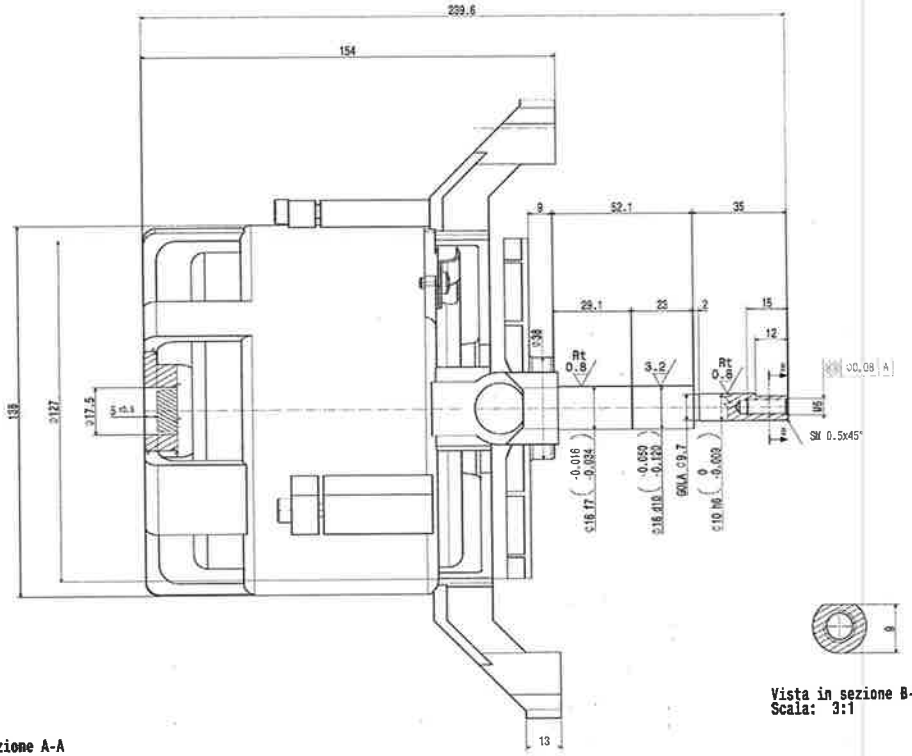

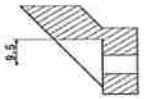

Vista in sezione A-A
Scala: 3:2

Vista in sezione B-B
Scala: 3:1

Capitolato di accettazione materiale ELUX

RANGE Vn	V	230	
FREQUENZA	Hz	50	60
Nr. POLI	N.	4	
CAPACITA' CONDENSATORE (tensione di lavoro)	µF(VLAV)	10(450)	
RESISTENZA AVVOLGIMENTI (di fase) A 24°C	Ω ±10%	MARCIA=15.80 AVV.=20.50	
CORRENTE A VUOTO (TOT. DI LINEA)	A ±10%	0.74	0.81
POTENZA ASSORBITA A VUOTO	W ±10%	133	162
COPPIA MINIMA DI SPUNTO (a 207V)	N X m ±10%	0.65	0.61
CORRENTE TOTALE A FREDDO A ROTORE BLOCCATO	A ±10%	4.33	3.74
TEMPO DI INTERVENTO PROTETTORE A ROTORE BLOCCATO	minuti	8'45"	12'12"

Capitolato di utilizzo ad uso R&D ELUX

RANGE Vn	V	230	
FREQUENZA	Hz	50	60
Nr. POLI	N.	4	
SCORRIMENTO A FREDDO	%	1.5	0.7
SCORRIMENTO A CALDO	%	1.3	0.3
SOVRATEMPERATURA	Max K	120	130

B

DATI TARGHETTA/LABEL DATA

MOT.ASINC.MONOFASE/ASYNCHR.ONE-PHASE MOTOR
TIPO/TYPE: LN 80 4 POLI/POLES
-Vn: 230 V Fn: 50 Hz
Pn 4P: 190W In: 1.30A cosØ: 0.91 RPM: 1450
-Vn: 230 V Fn: 60 Hz
Pn 4P: 190W In: 1.30A cosØ: 0.91 RPM: 1750
-Cn 4P: 10µF I.CI.: F IP: 00
-Protector type: PTO 160°C

CARATTERISTICHE/CHARACTERISTICS

SUPPORTO DEL MOTORE IN ALLUMINIO PRESSOFUSO
DIE-CAST ALLUMINIUM SUPPORT FOR MOTOR

MATERIALE ALBERO/SHAFT MATERIAL: C40

PROTETTORE TERMICO NORMALMENTE APERTO TIPO S02 140.05
THERMAL BREAKER NORMALY CLOSED TYPE S02 140.05

CUSCIN.ANT/FRONT BEARING TYPE 6202 2Z-HT-C3
CUSCIN.POST/BACK BEARING TYPE 6202 2Z-HT-C3

MOTORE AVVOLTO IN PVC TERMORETRATTILE
MOTOR WRAPPED ON THERMORETRACTILE PVC

CONNEX.MOTORE-CONNETTORE(0854319700 6 VIE PORTA MASC. INARCA PASSO 5)
CONNECTION AMONG MOTORWIRES-CONNECTOR:

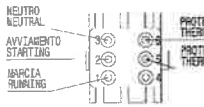

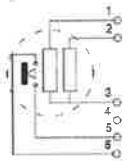

B

Vn: TENSIONE NOMINALE/RATED VOLTAGE
Fn: FREQUENZA/FREQUENCY
Pn: POT.ALL'ASSE/SHAFT POWER
W: POT.ASSORB./POWER SUPPLY
Cn: CONDENSATORE/CAPACITY
In: CORRENTE NOMINALE/RATED CURRENT
Nr.GIRI/RPM: NUMERO DI GIRI/REVOLUTION PER MINUTE

I.CI.: CLASSE ISOLAM./INSULATION CLASS
IP: PROTEZIONE/PROTECTION

A	17/03/2011	S.Scottile	
		P.Stroppolo	
		M.Furlanetto	

MOTORE 1F 4P 190W 230V

Electrolux Professional

611804002

RoHS 2002/95/EC

Il contenuto di questo disegno è di proprietà esclusiva della Electrolux Professional S.p.A. Non può essere riprodotto o comunicato a terzi senza autorizzazione scritta. Tutti i diritti sono riservati.

This drawing contains confidential information and is the property of ELECTROLUX PROFESSIONAL Vallenoncello,Italy without whose permission it may not be copied,shown or handed to a third party or otherwise used and it is to be returned promptly upon request to the ELECTROLUX PROFESSIONAL Vallenoncello,Italy which is responsible for the drawing.

SUPERFICI IN VISTA
VISIBLE SURFACES

PIEGA SU
BEND UP

PIEGA GIU
BEND DOWN

RoHS 2002/95/EC

IL COMPONENTE DEVE ESSERE CONFORME ALLA DIRETTIVA
THE COMPONENT MUST BE COMPLIANT TO STANDARDS

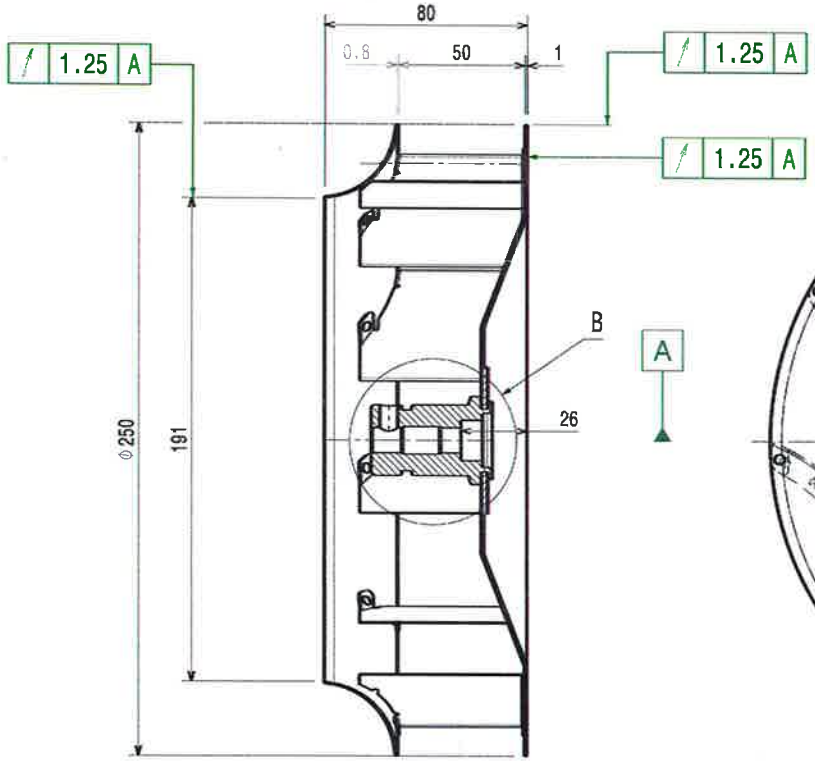

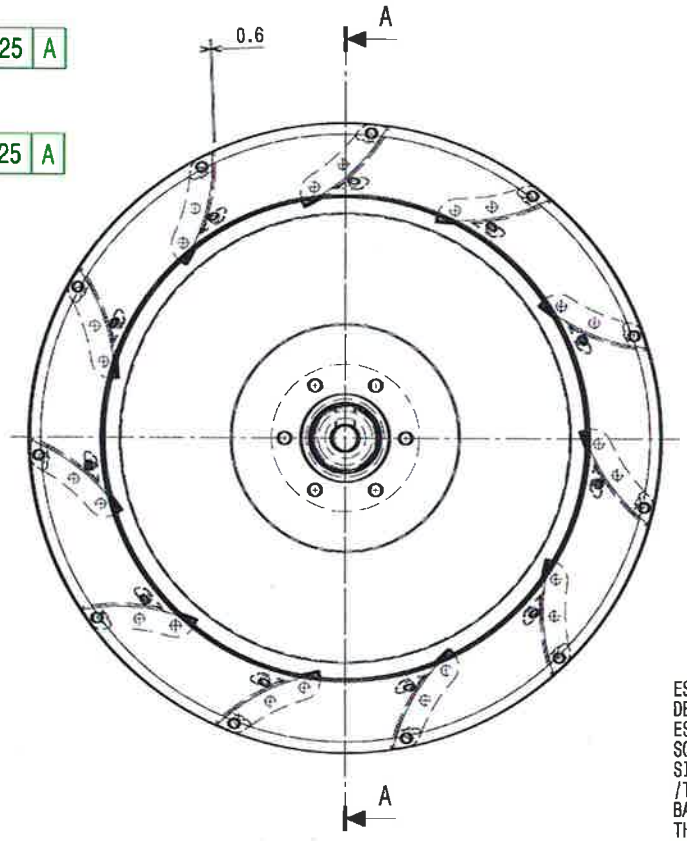

N.B:
I PUNTI ELETTRICI DEVONO ESSERE ESEGUITI IN MODO DA GARANTIRE UNA ADEGUATA TENUTA MECCANICA: RESISTENZA ALLA SOLLECITAZIONE AL TAGLIO PARI A T.rot.>300 Kg
CON UN DIAMETRO DEL NOCCIOLO DI Ø3.5
/SPOT WELDING MUST GARANTEE AN ADEQUATE MECHANICAL RESISTANCE:
T rot.>300 Kg Ø Core 3.5 m

L'ASSIEMAGGIO DEI COMPONENTI LA VENTOLA DEVEESSERE FATTO ESEGUENDO LE PUNTATURE CON LA SEQUENZA "IN CROCE".
THE ASSEMBLY OF THE FAN COMPONENTS MUST BE SPOT WELDED IN CROSS SEQUENCE.

CURARE LA RECIPROCA COASSIALITA' DEL DISCO, DEL MOZZO E DELL'ANELLO.
PAY ATTENTION TO THE DISK AND HUB COAXIALITY.

ESEGUIRE L'EQUILIBRATURA DINAMICA DELLA GIRANTE CON VELOCITA` DI ESERCIZIO PARI A 2000 GIRI/MIN;
SQUILIBRIO MASSIMO AMMESSO: 3.2 gr.x cm. SIA SU DISCO CENTRALE CHE SULL'ANELLO.
/TO EXECUTE THE FAN WHEEL DYNAMIC BALANCING AT 2000 rpm;
THE MAX UMBALANCE ADMITTED: 3.2 gr.x cm.
THE SAME VALUE FOR DISCO CENTRALE AND FOR ANELLO.

MASSIMA TEMPERATURA DI ESERCIZIO 300 °C
MAXIMUM OPERATING TEMPERATURE 300 ° C

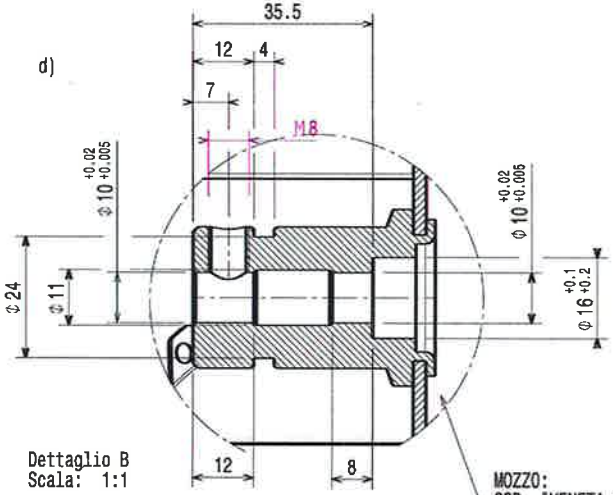

Dettaglio B
Scala: 1:1

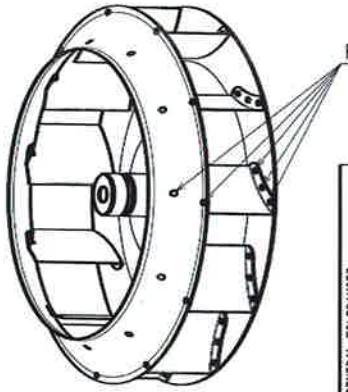

MOZZO:
COD. "VENETA GIRANTI" - 000158

REV	I.R.	MODIFICATIONS	REQ.	SIGN	DATE
E	01	- AGG. TIPO E SPESSORE MATERIALE. C.I.	M0170	Fogolin	03/02/2015
D	01	- MOD. MOZZO SU RICHIESTA FORNITORE. C.I.	M0170	Fogolin	02/09/2014
C	01	- MOD. DISEGNO COME CAMPIONE VENETA GIRANTI.	M0170	Fogolin	05/08/2014
B	00	- AGG. TOLLERANZE DI OSCILLAZIONE ED EQUILIBRATURA. C.I.	M0170	Fogolin	30/06/2011
A	00	- MOD. MOZZO. C.I.	M0170	Fogolin	23/09/2010

GENERAL TOLERANCES UNI EN 22768-1/2 m K

SCALE
DATE 04/06/2010
DRN S.Fogolin
CHD
APPR S.Amadei

MATERIAL: EN 10088-2 1.4301 (AISI 304)
TREATMENT:
SUPPLY SPECIFICATIONS Nr | DERIVED FROM Nr | REPLACES Nr

ESENTE DA BAVE E SPIGOLI TAGLIENTI
FREE OF BURRS AND CUTTING EDGES
1 A

Electrolux Professional Modular Cooking

DESCRIPTION VENTOLA VENETA GIRANTI D. 250 H. 80

EUROPEAN METHOD

PART Nr 682800401 REV. E

This drawing contains confidential information and is the property of ELECTROLUX PROFESSIONAL Vallenoncello,Italy without whose permission it may not be copied,shown or handed to a third party or otherwise used and it is to be returned promptly upon request to the ELECTROLUX PROFESSIONAL Vallenoncello,Italy which is responsible for the drawing.

SUPERFICI IN VISTA
VISIBLE SURFACES

PIEGA SU
BEND UP

PIEGA GIU
BEND DOWN

RoHS 2002/95/EC

IL COMPONENTE DEVE ESSERE CONFORME ALLA DIRETTIVA
THE COMPONENT MUST BE COMPLIANT TO STANDARDS

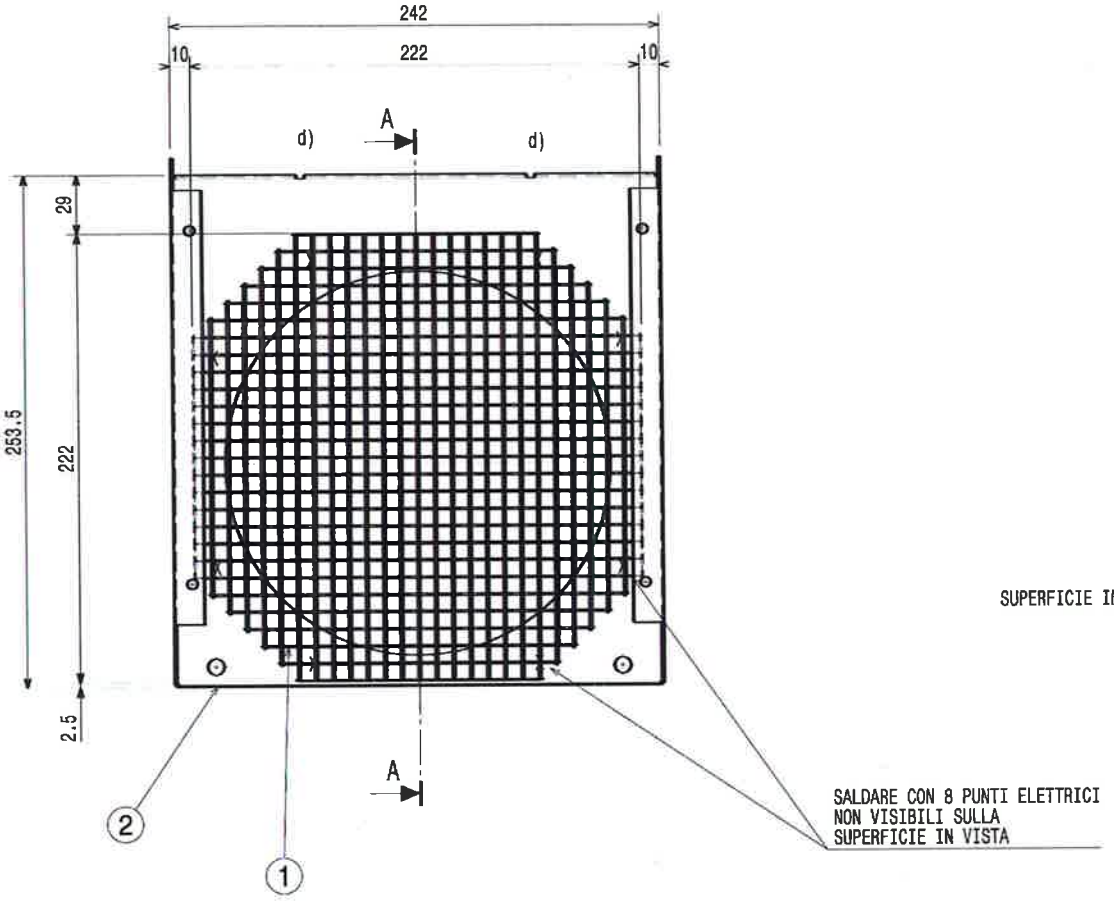

Item No.	Numero parte	Descrizione del prodotto	Quantity
1	516899K00	RETE PROTEZIONE VENTOLA - FOR. V. N900	1
2	50189AN02	CAMINO VENTOLA PUNKER - F. V. E9	1

GENERAL TOLERANCES UNI EN 22768-1/2

REV	I.P.	MODIFICATIONS	REQ.	SIGN	DATE
D	02	- AGG. SCARICHI SU CAMINO.	M0170	Fogolin	19/02/2015
A	01	- MOD. MATERIALE PART. 2 (430 DIVENTA 304).	M0170	Fogolin	24/11/2010

SCALE
DATE 03/08/2010
DRN S.Fogolin
CHD
APPR S.Amadei

MATERIAL:
TREATMENT:
SUPPLY SPECIFICATIONS Nr
DERIVED FROM Nr
REPLACES Nr

ESENTE DA BAVE E SPIGOLI TAGLIENTI
FREE OF BURRS AND CUTTING EDGES
1 A

DESCRIPTION ASS. CAMINO VENTOLA

Electrolux Professional
Modular Cooking

EUROPEAN METHOD

PART Nr 80589AR02 REV. D

This drawing contains confidential information and is the property of ELECTROLUX PROFESSIONAL Vallenoncello,Italy without whose permission it may not be copied,shown or handed to a third party or otherwise used and it is to be returned promptly upon request to the ELECTROLUX PROFESSIONAL Vallenoncello,Italy which is responsible for the drawing.

SUPERFICI IN VISTA
VISIBLE SURFACES

PIEGA SU
BEND UP

PIEGA GIU
BEND DOWN

RoHS 2002/95/EC

IL COMPONENTE DEVE ESSERE CONFORME ALLA DIRETTIVA
THE COMPONENT MUST BE COMPLIANT TO STANDARDS

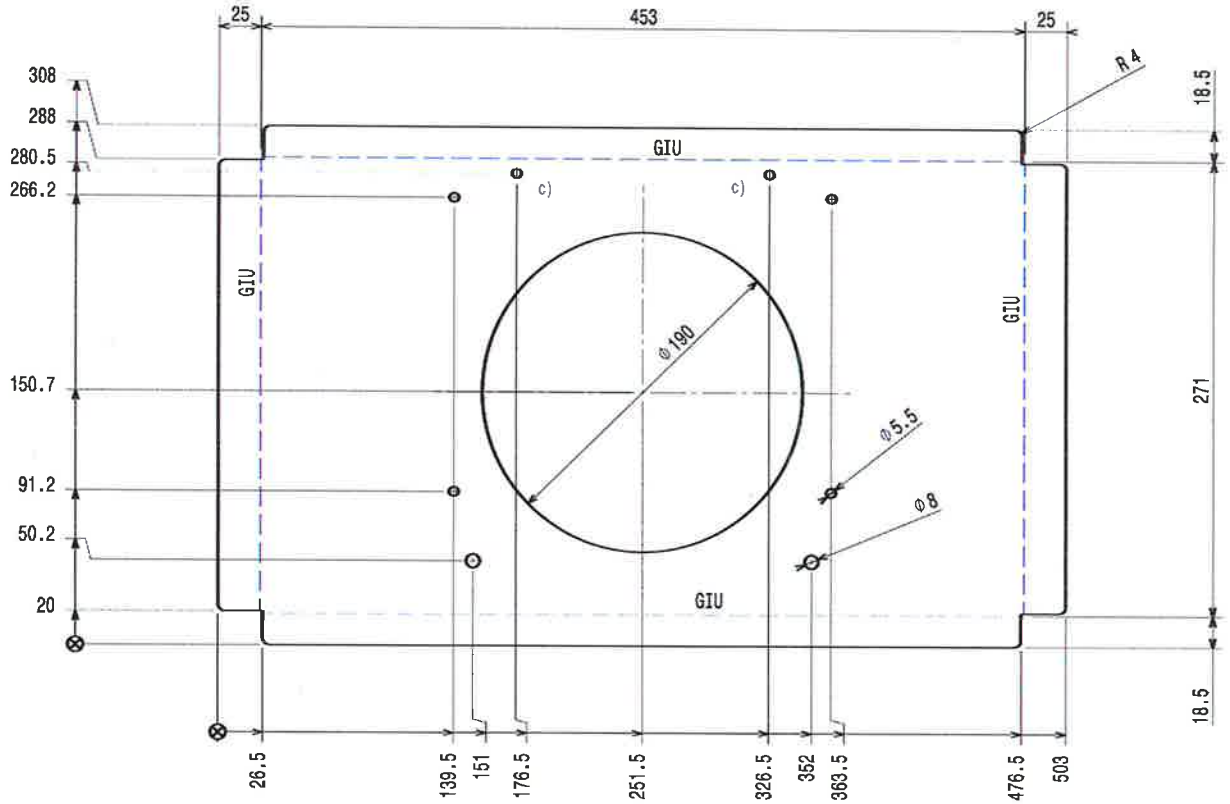

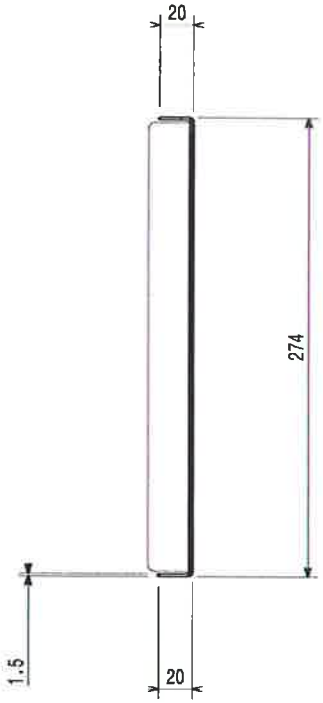

"b-d"

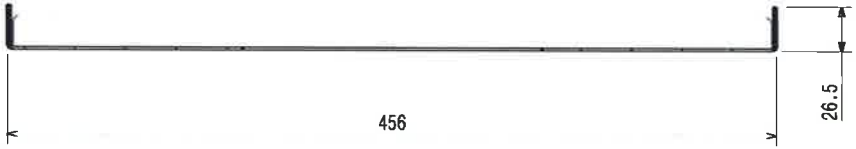

* NORMA DI PRODUZIONE / PRODUCTION SPECIFICATIONS N.1.01101
SPECIFICA DELL' ACCIAIO INOX / STAINLESS STEEL SPECIFICATION N.1.02000
SPECIFICA DELL' ACCIAIO / STEEL SPECIFICATION N.1.03000

REV	I.R.	MODIFICATIONS	REQ.	SIGN	DATE
D	03	- MOD. QUOTE INDICATE.	M0170	Fogolin	10/12/2014
C	02	- AGG. 2 FORI.	M0170	Fogolin	14/06/2011
B	01	- CORRETTO QUOTA INDICATA. C.I.	M0170	Fogolin	30/03/2011
A	01	- MOD. MATERIALE (AISI 430 DIVENTA 304).	M0170	Fogolin	24/11/2010

GENERAL TOLERANCES UNI EN 22768-1/2 m K

SCALE
DATE 03/08/2010
DRN S.Fogolin
CHD
APPR S.Amadei

MATERIAL: EN 10088-2 1.4301 (AISI 304)
TREATMENT: 2B
SUPPLY SPECIFICATIONS Nr
DERIVED FROM Nr
REPLACES Nr

ESENTE DA BAVE E SPIGOLI TAGLIENTI
FREE OF BURRS AND CUTTING EDGES
1 A

DESCRIPTION PROTEZIONE VENTOLA PUNKER

Electrolux Professional
Modular Cooking

EUROPEAN METHOD
PART Nr 50189AL03 REV.

A3

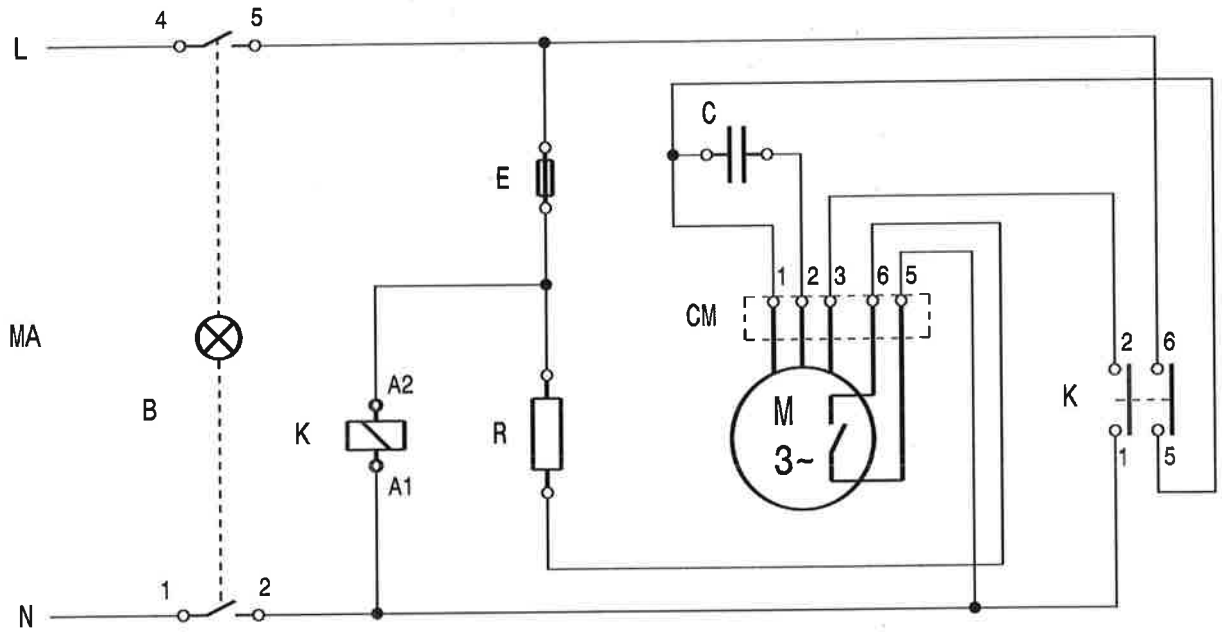

MA	MORSETTIERA	BLOK
E	FUSIBILE	FUSE
C	CONDENSATORE MOTORE	MOTOR CAPACITOR
R	RESISTENZA	RESISTANCE
K	CONTATTORE	CONTACTOR
CM	CONNETTORE MOTORE	COTOR CONNECTOR
B	INTERRUTTORE GENERALE	MAIN SWITCH

MODEL	From s.n.:	PART NUMBER
SCHEMA ELETTRICO 4 FUOCHI / FORNO VENTILATO E 9		602896J03

This drawing contains confidential information and is the property of ELECTROLUX PROFESSIONAL Vallenoncello,Italy without whose permission it may not be copied,shown or handed to a third party or otherwise used and it is to be returned promptly upon request to the ELECTROLUX PROFESSIONAL Vallenoncello,Italy which is responsible for the drawing.

SUPERFICI IN VISTA
VISIBLE SURFACES

RoHS 2002/95/EC

IL COMPONENTE DEVE ESSERE CONFORME ALLA DIRETTIVA
THE COMPONENT MUST BE COMPLIANT TO STANDARDS

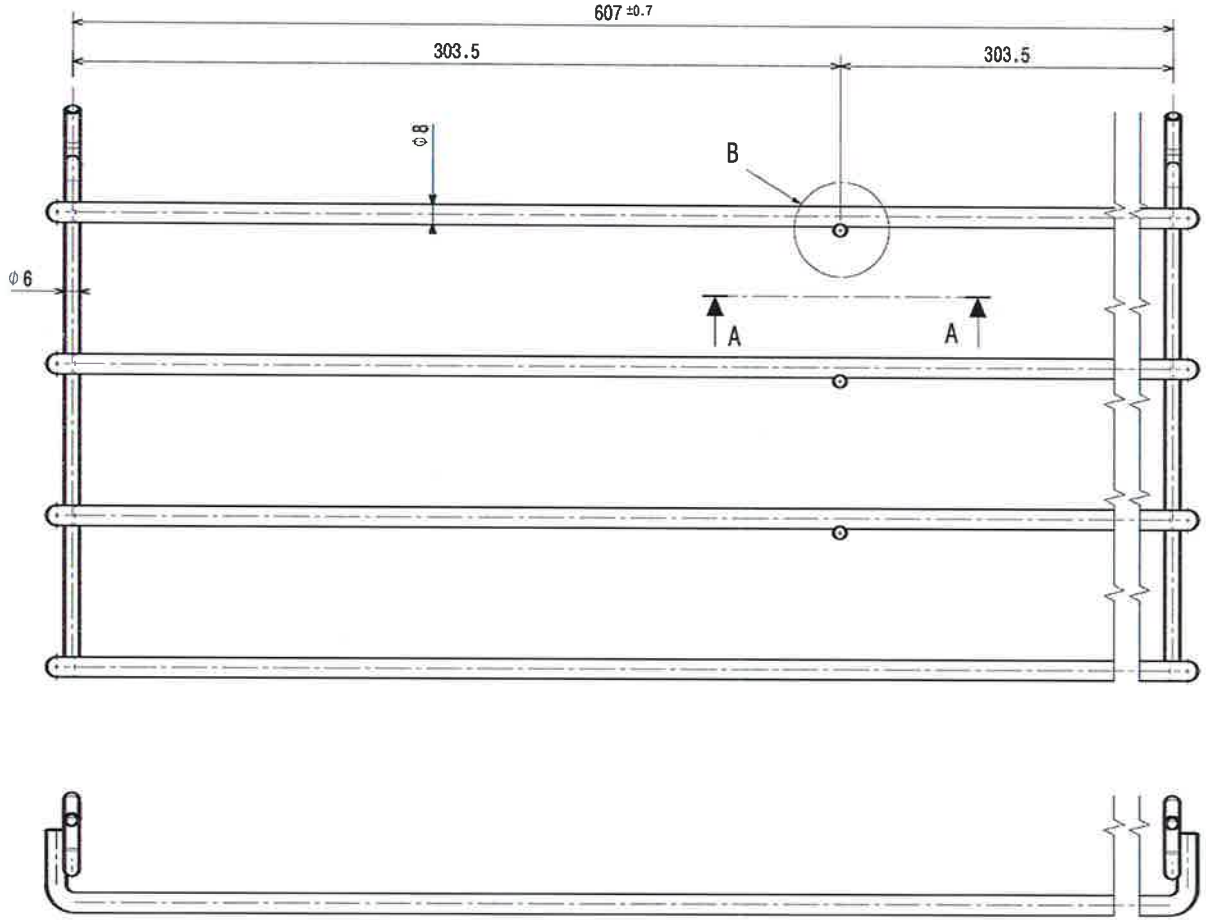

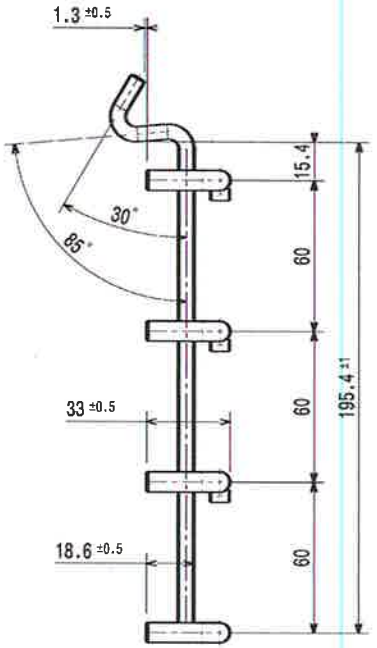

FILO CRUDO LUCIDO BIANCO
TIPO A UNI 3598

RAGGI DI PIEGA = MINIMI

Vista in sezione A-A
Scala: 1:1

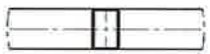

Dettaglio B
Scala: 1:1

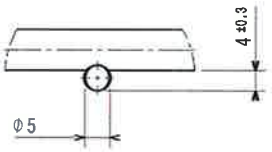

GENERAL TOLERANCES UNI EN 22768-1/2 m K

REV	MODIFICATIONS	REQ.	SIGN	DATE

MATERIAL:
TREATMENT: CROMATURA Fe/Ni20dCrr UNI 9948
SUPPLY SPECIFICATIONS Nr | DERIVED FROM Nr | REPLACES Nr

ESENTE DA BAVE E SPIGOLI TAGLIENTI
FREE OF BURRS AND CUTTING EDGES (1) (A)

SCALE 1:2
DATE 05/11/2009
DRN S.Fogolin
CHD
APPR E.Marzinotto

DESCRIPTION GUIDA TEGLIE N900 D8 AUSTRALIA

Electrolux Professional Modular Cooking

EUROPEAN METHOD

PART Nr 51489DJ00 REV A

A3

This drawing contains confidential information and is the property of ELECTROLUX PROFESSIONAL Vallenoncello,Italy without whose permission it may not be copied,shown or handed to a third party or otherwise used and it is to be returned promptly upon request to the ELECTROLUX PROFESSIONAL Vallenoncello,Italy which is responsible for the drawing.

SUPERFICI IN VISTA
VISIBLE SURFACES

RoHS 2002/95/EC

IL COMPONENTE DEVE ESSERE CONFORME ALLA DIRETTIVA
THE COMPONENT MUST BE COMPLIANT TO STANDARDS

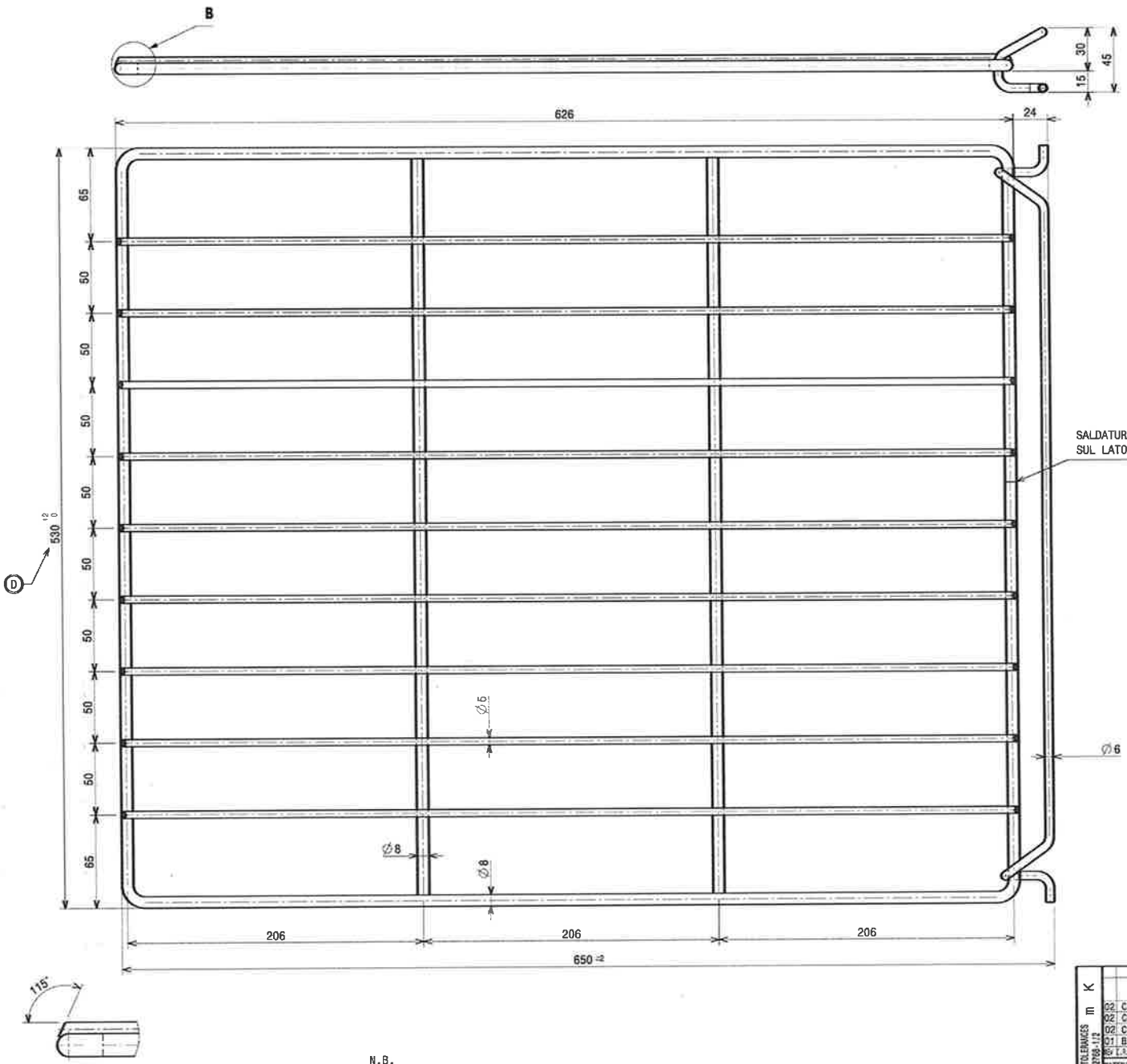

Dettaglio B
Scala: 1:1

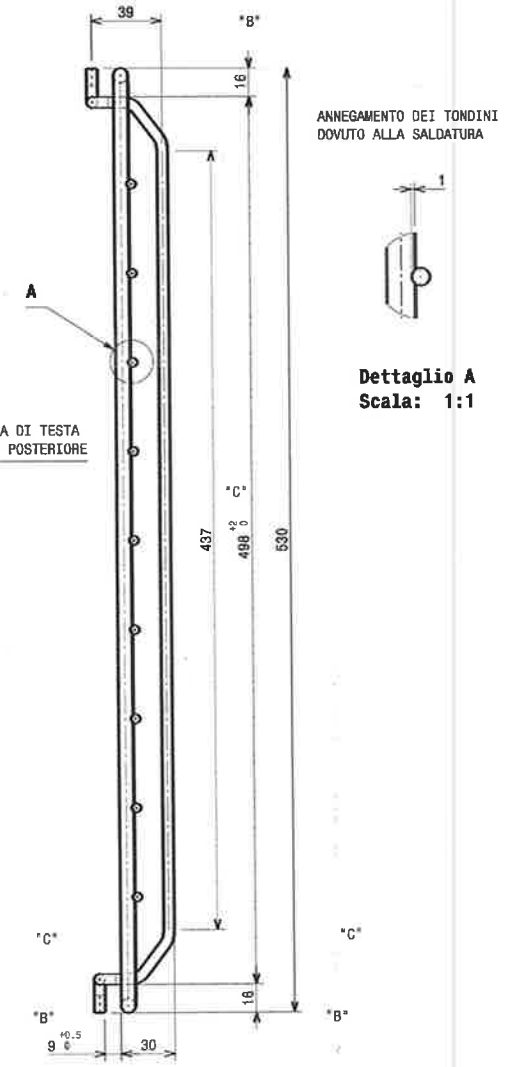

ANNEGAMENTO DEI TONDINI
DOVUTO ALLA SALDATURA

Dettaglio A
Scala: 1:1

N.B.
- L'ASSIEMAGGIO DEI TONDINI E'OTTENUTO MEDIANTE SALDATURA ELETTRICA A RESISTENZA ESEGUITA A REGOLA D'ARTE.
- LE ESTREMITA'DEI TONDINI DEVONO ESSERE SENZA BAVE.
- PARTICOLARE ESENTE DA DIFETTI ESTETICI.

- FILO CRUDO LUCIDO BIANCO TIPO A UNI 3598

02	C	- ASS. TOLLERANZA. C.I.	00103	Fogolin	12/11/2008	
02	C	- MOD. DISEGNO COME RICHIESTO DAL FORNITORE. C.I.	00103	Fogolin	28/10/2008	
02	C	- MOD. TERMINALI POSTERIORI.	00103	Fogolin	27/10/2008	
01	B	- MOD. TERMINALI POSTERIORI.	00103	Fogolin	06/10/2008	
REV		MODIFICATIONS	REQ.	SIGN	DATE	APPR

GENERAL TOLERANCES UNI EN 22768-1/2 m K

SCALE 1:2
DATE 18/12/2008
DRN MODULAR
CHD
APPR E.Marzinotto

MATERIAL: Vedi disegno/look at the drawing
TREATMENT: CROMATURA Fe/Ni20dCrr UNI 9948
SUPPLY SPECIFICATIONS Nr | DERIVED FROM Nr | REPLACES Nr

ESENTE DA BAVE E SPIGOLI TAGLIENTI
FREE OF BURRS AND CUTTING EDGES
1 A

DESCRIPTION GRIGLIA FORNO AUSTRALIA

Electrolux Professional
Modular Cooking

EUROPEAN METHOD

PART Nr 856814402 REV C

A2

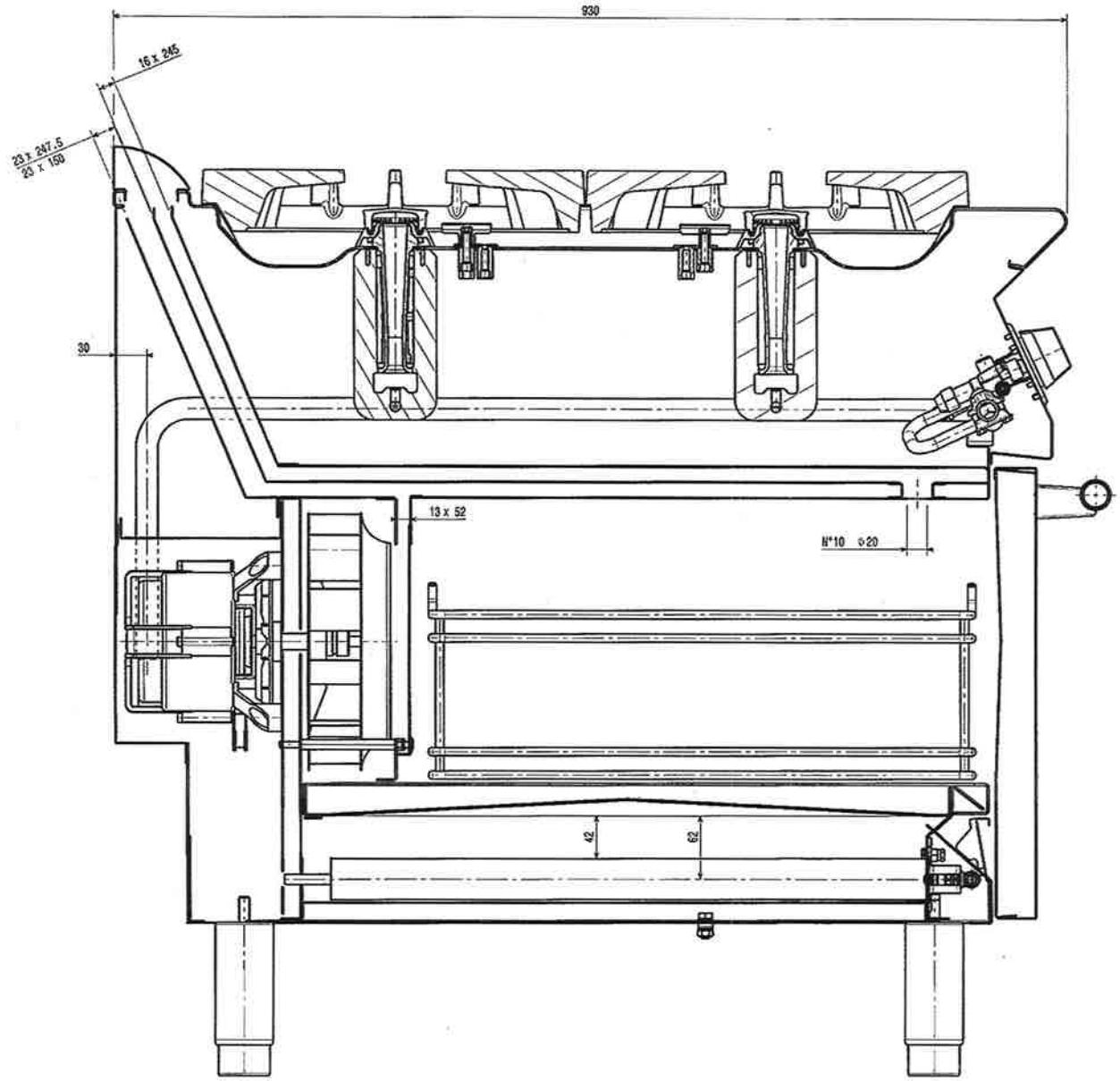

This drawing contains confidential information and is the property of ELECTROLUX PROFESSIONAL Vallenoncello,Italy without whose permission it may not be copied,shown or handed to a third party or otherwise used and it is to be returned promptly upon request to the ELECTROLUX PROFESSIONAL Vallenoncello,Italy which is responsible for the drawing.

SUPERFICI IN VISTA
VISIBLE SURFACES

——— PIEGA SU
BEND UP

- - - - - PIEGA GIU
BEND DOWN

RoHS
2002/95/EC

IL COMPONENTE DEVE ESSERE CONFORME ALLA DIRETTIVA
THE COMPONENT MUST BE COMPLIANT TO STANDARDS

GENERAL TOLERANCES UNI EN 22768-1/2 m K					SCALE
					DATE 26/01/2011
					DRN
					CHD
REVISIONS	MODIFICATIONS	REQ.	SIGN	DATE	APPR
MATERIAL:					
TREATMENT:					
SUPPLY SPECIFICATIONS Nr		DERIVED FROM Nr			REPLACES Nr

ESENTE DA BAVE E SPIGOLI TAGLIENTI
FREE OF BURRS AND CUTTING EDGES

DESCRIPTION 4 FUOCHI / FORNO VENTIL. - VISTA LATERALE

Electrolux Professional
Modular Cooking

EUROPEAN METHOD

PART N° 820266010 REV. B.00

A2

This drawing contains confidential information and is the property of ELECTROLUX PROFESSIONAL Vallenoncello,Italy without whose permission it may not be copied,shown or handed to a third party or otherwise used and it is to be returned promptly upon request to the ELECTROLUX PROFESSIONAL Vallenoncello,Italy which is responsible for the drawing.

SUPERFICI IN VISTA
VISIBLE SURFACES

PIEGA SU
BEND UP

PIEGA GIU
BEND DOWN

RoHS
2002/95/EC

IL COMPONENTE DEVE ESSERE CONFORME ALLA DIRETTIVA
THE COMPONENT MUST BE COMPLIANT TO STANDARDS

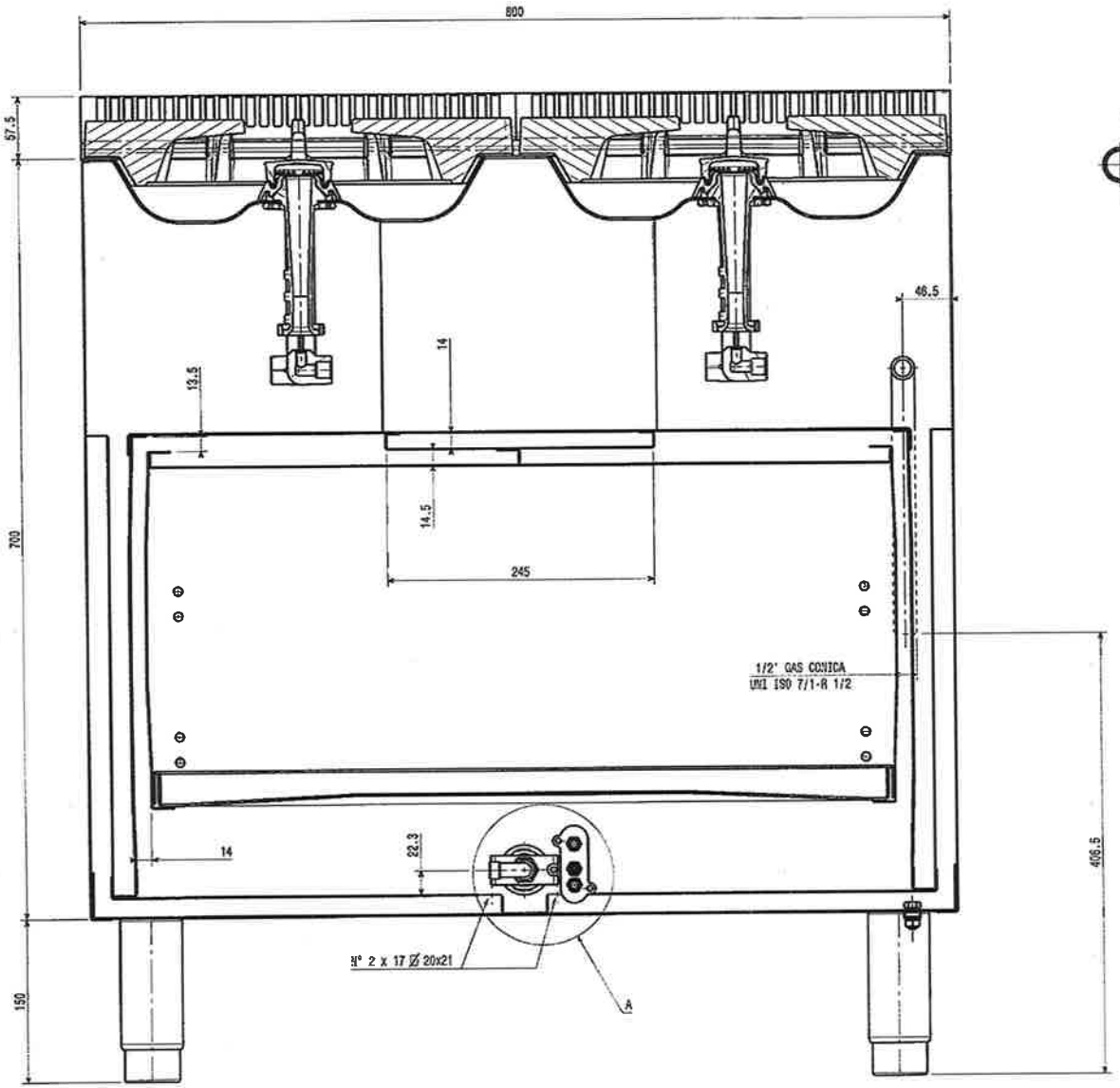

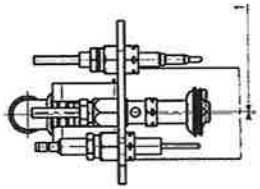

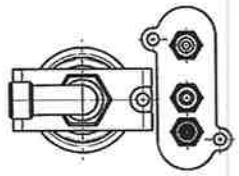

PART. A
SCALA 1:1.5

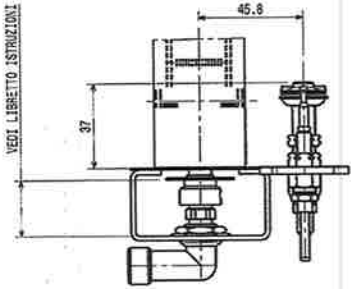

GENERAL TOLERANCES UNI EN 22768-1/2 m K					SCALE	
					DATE	31/01/2011
					DRN	
					CHD	
					APPR	
REV	N.°	MODIFICATIONS	MOD.	SIGN	DATE	
MATERIAL:						
HEATMENT:						
SUPPLY SPECIFICATIONS N°			DERIVED FROM N°		REPLACES N°	
ESENTE DA BAVE E SPIGOLI TAGLIENTI FREE OF BURRS AND CUTTING EDGES			1	A		

Electrolux Professional
Modular Cooking

DESCRIPTION: 4 FUOCHI / FORNO VENTIL. - VISTA FRONTALE

EUROPEAN METHOD

PART N° 820266020 REV. 8.00

A2

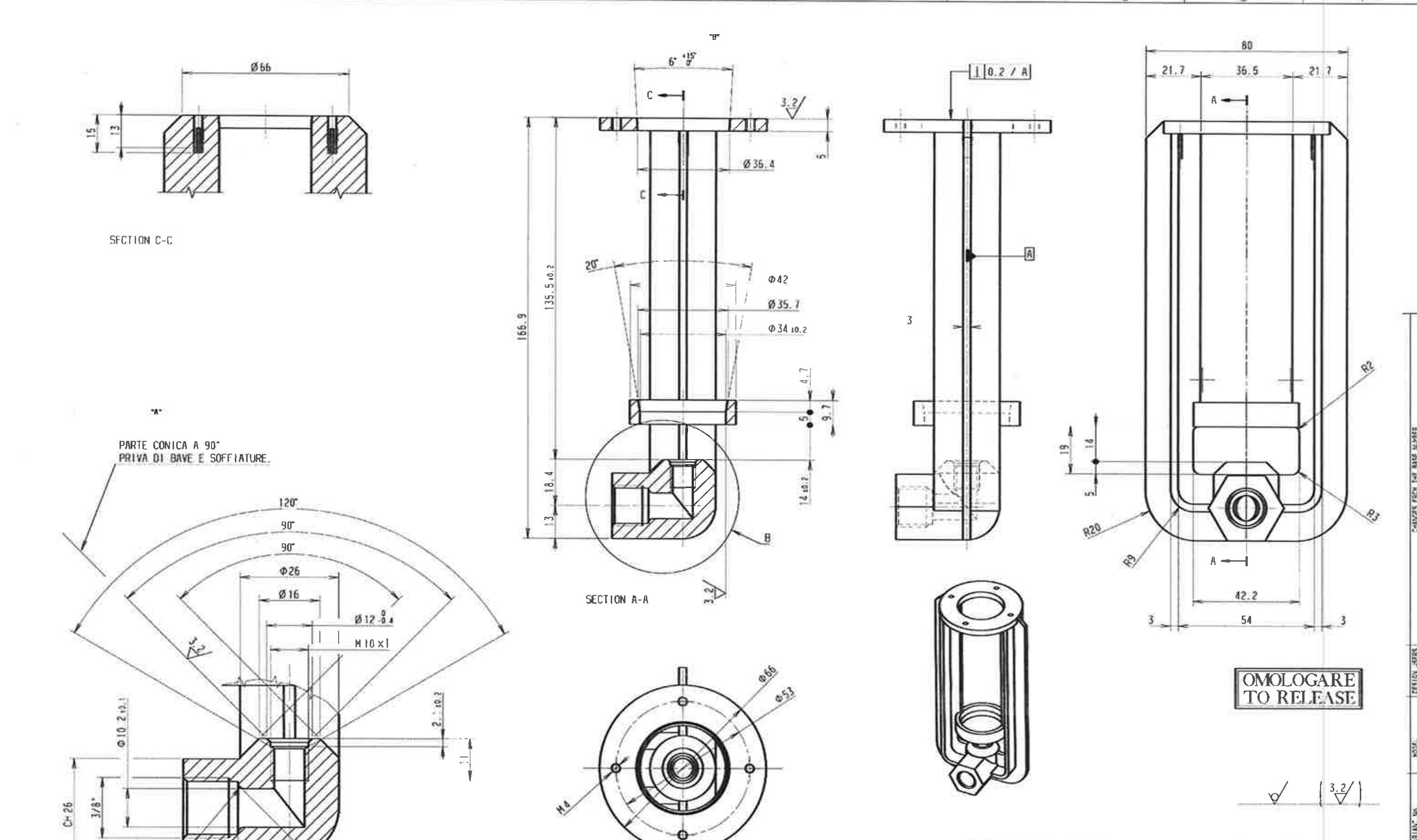

POS	DESCRIPTION	PART No	Q.TY

REF	MODIFICATIONS	REQUEST	SIGN	DATE
C	CORRETTO DESCRIZIONE MATERIALE, ERA INDICATO GENERIC."ALLUMINIO". C.I.	3C065	FOG.	24.07.06
B	AGG. TOLLERANZA PER ALLARGARE ANGOLO. C.I.	3C065	FOG.	16.12.03
A	AGG. DICITURE: PRIVO DI BAVE E SOFFIATURE. C.I.	3C023	FOG.	06.05.03
-	03-ALZATO 14,8 mm. MOD.FILETTATURA 16x1,5 DIV. 3/8".	2C042	FOG.	01.08.02
-	AGGIUNTO SEGNI DI LAVORAZIONE. C.I.	2C042	FOG.	20.07.02
-	02-RIFATTO DISEGNO.	2C042	FOG.	15.07.02
-	ELIMINATO ATTACCO SUPERIORE VENTURI, MOD.FORI FISS. RIPIANO. C.I.	2C020	FOG.	23.04.02

"C" MATERIAL Lega EN AB 46100

TREATMENT -

DESIGN USERS -

SCALE 1:1
DATE 25.02.02
DRN FOGOLIN
CHD -
APPR -
EUROPEAN METHOD
DESIGN OWNER ITC_PD
REPLACES No -
DERIVED FROM No SF00/1500
SUPPLY SPECIFICATIONS No -

Electrolux Professional

TITLE SUPPORTO VENTURI FUOCHI APERTI
MODEL N900
NUMBER 510819003 REV -

VARIANT No | MODEL | DESIGN USERS | CHANGES FROM THE BASE NUMBER

GENERAL TOLERANCES ACCORDING TO EN 22768-1/2

LINEAR DIMENSIONS			ANGULAR DIMENSIONS			GEOMETRICAL		
f	m	c	v	f	m	c	v	H	K	L
X					X				X	

[2] Critical dimensions which must be under capability
(A) (B) (C) (D)
— Visible surfaces
Draft angles (not shown):

This drawing contains confidential information and is the property of ELECTROLUX PROFESSIONAL Vallenoncello, Italy without whose permission it may not be copied, shown or handed to a third party or otherwise used, and it is to be returned promptly upon request to the ELECTROLUX PROFESSIONAL Vallenoncello, Italy which is responsible for the drawing.

APPROVED: PARONI - 25 Jul 2006

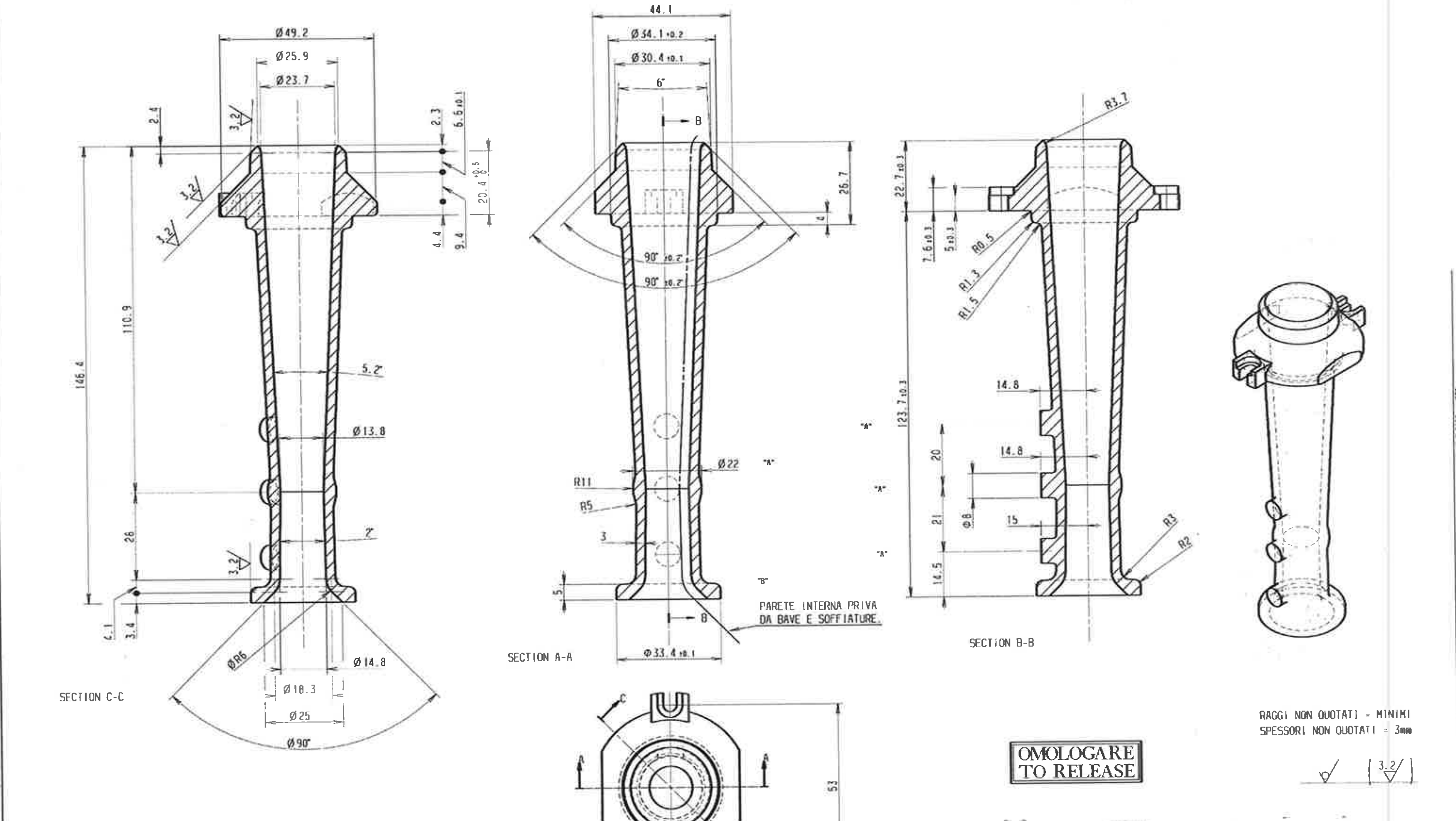

REF	MODIFICATIONS	REQUEST	SIGN	DATE
C	OMESSA DESCRIZIONE MATERIALI, ED INDICATO GENERIC "ALLUMINIO". C.I.	3C065	FOG.	25.07.06
B	AGG. DICITURA: ESENTE DA BAVE E SOFFIATURE. C.I.	3C023	FOG.	06.05.05
A	AGG. RINFORZI CHIESTI DAL FORNITORE. C.I.	3C001	FOG.	18.03.03
-	03-RIFATO DISEGNO.	2C042	FOG.	13.09.02
-	AGG. SEGNI DI LAVORAZIONE. C.I.	2C042	FOG.	20.07.02
-	02-RIFATTO DISEGNO.	2C042	FOG.	17.07.02

POS | DESCRIPTION | PART No | Q.TY

MATERIAL: Lega PIRAL G Al Ni 2 Mn 2 (UNI 6253-68) 50%
Lega FN AB 46100 50%

TREATMENT: -

SCALE 1.2:1
DATE 26.04.02
DWN FOGOLIN
CHD -
APPR -
EUROPEAN METHOD
DESIGN OWNER ITC_PD
REPLACES No -
DERIVED FROM No
SUPPLY SPECIFICATIONS No -
DESIGN USERS

Electrolux Professional

TITLE VENTURI 6 KW

MODFI -

NUMBER 510819103 REV -

A2

GENERAL TOLERANCES ACCORDING TO EN 22768-1/2

[2] Critical dimensions which must be under capability (A) (B) (C) (D)
Visible surfaces
Draft angles (not shown):

This drawing contains confidential information and is the property of ELECTROLUX PROFESSIONAL Vallenoncello, Italy without whose permission it may not be copied, shown or handed to a third party or otherwise used, and it is to be returned promptly upon request to the ELECTROLUX PROFESSIONAL Vallenoncello, Italy which is responsible for the drawing.

APPROVED: PARONI - 25 Jul 2006

This drawing contains confidential information and is the property of ELECTROLUX Professional S.p.A. Pordenone, Italy
It must not be copied, communicated or disclosed without proper permission. The recipient undertakes to keep it confidential and not to use it for purposes other than those for which it was originally supplied. Upon request, it must be returned promptly to the Electrolux Professional S.p.A. Pordenone, Italy which is responsible for the drawing.

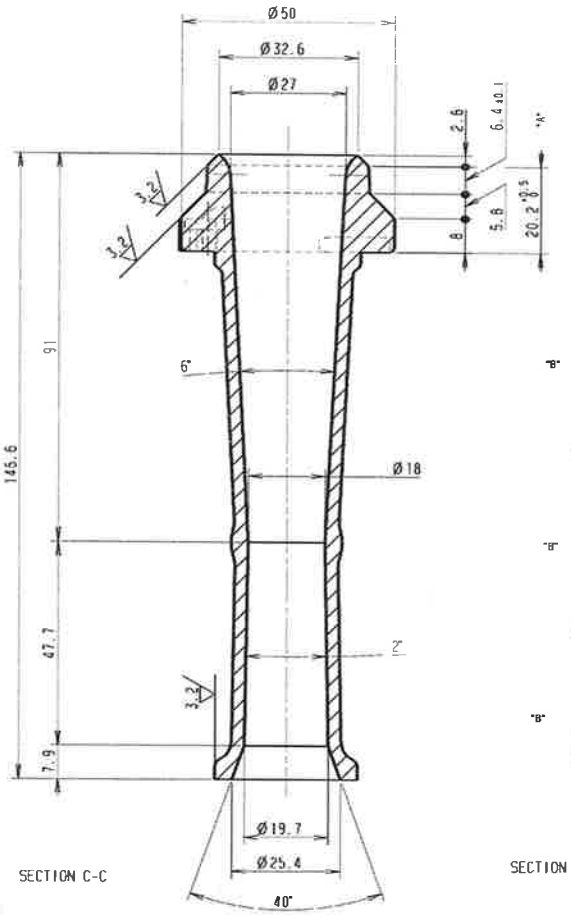

SECTION C-C

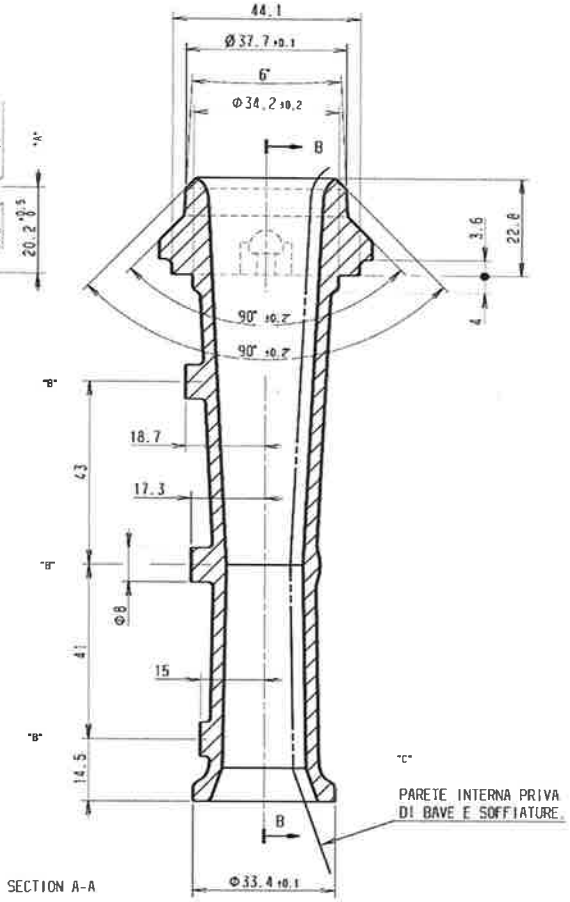

SECTION A-A

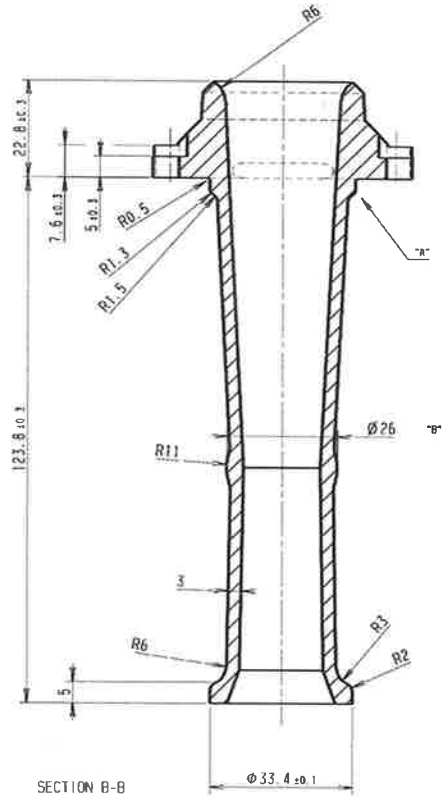

SECTION B-B

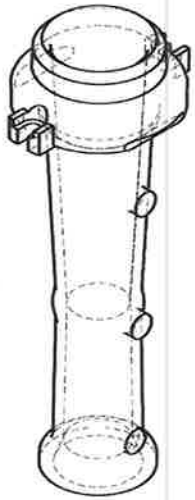

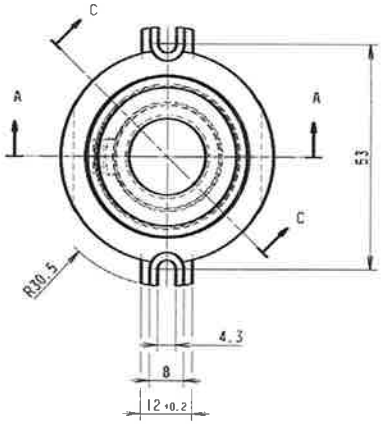

RAGGI NON QUOTATI - MINIMI
SPESSORI NON QUOTATI = 3 mm

OMOLOGARE
TO RELEASE

POS	DESCRIPTION	PART No	Q.TY

REV	MODIFICATIONS	REQUEST	SIGN	DATE
D	CORRETTA DESCRIZIONE MATERIALE, ERA INDICATA GENERICA: "ALLUMINIO" C.I.	3C065	FOG.	25.07.06
C	AGG.DICITURA: PRIVA DI BAVE E SOFFIATURE C.I.	3C023	FOG.	06.05.03
B	AGG.RINFORZI CHIESTI DAL FORNITORE. C.I.	3C001	FOG.	18.03.03
A	AGG.TOLLERANZA, AGG.ANELLO Ø 54.2, AGG.RAGGI C.I.	2C042	FOG.	09.09.02
-	02-MOD.DIMENSIONI VENTURI.	2C042	FOG.	31.07.02

"D"

MATERIAL: Lega PIRAL G Al Ni 2 Mn 2 (UNI 6253-68) 50%
Lega EN AB 46100 50%

TREATMENT: -

DESIGN USERS: - - -

SCALE 1,2:1
DATE 31.07.02
DRN FOGOLIN
CHD -
APPR -

EUROPEAN METHOD

DESIGN OWNER: ITC PD

REPLACES No -
DERIVED FROM No -
SUPPLY SPECIFICATIONS No -

TITLE: VENTURI 10 KW

MODEL: N900

NUMBER: 510820602 REV -

Electrolux Professional

GENERAL "TOLERANCES ACCORDING TO EN 22768-1/2" | LINEAR DIMENSIONS | ANGULAR DIMENSIONS | GEOMETRICAL

Drafting dimensions which are not to be used as a basis for machining.
Visible surfaces.
Draft angles (not shown).

CHANGES FROM THE BASE NUMBER | DESIGN USERS | MODEL | VARIANT No

A2

APPROVED: PARONI - 25 Jul 2006

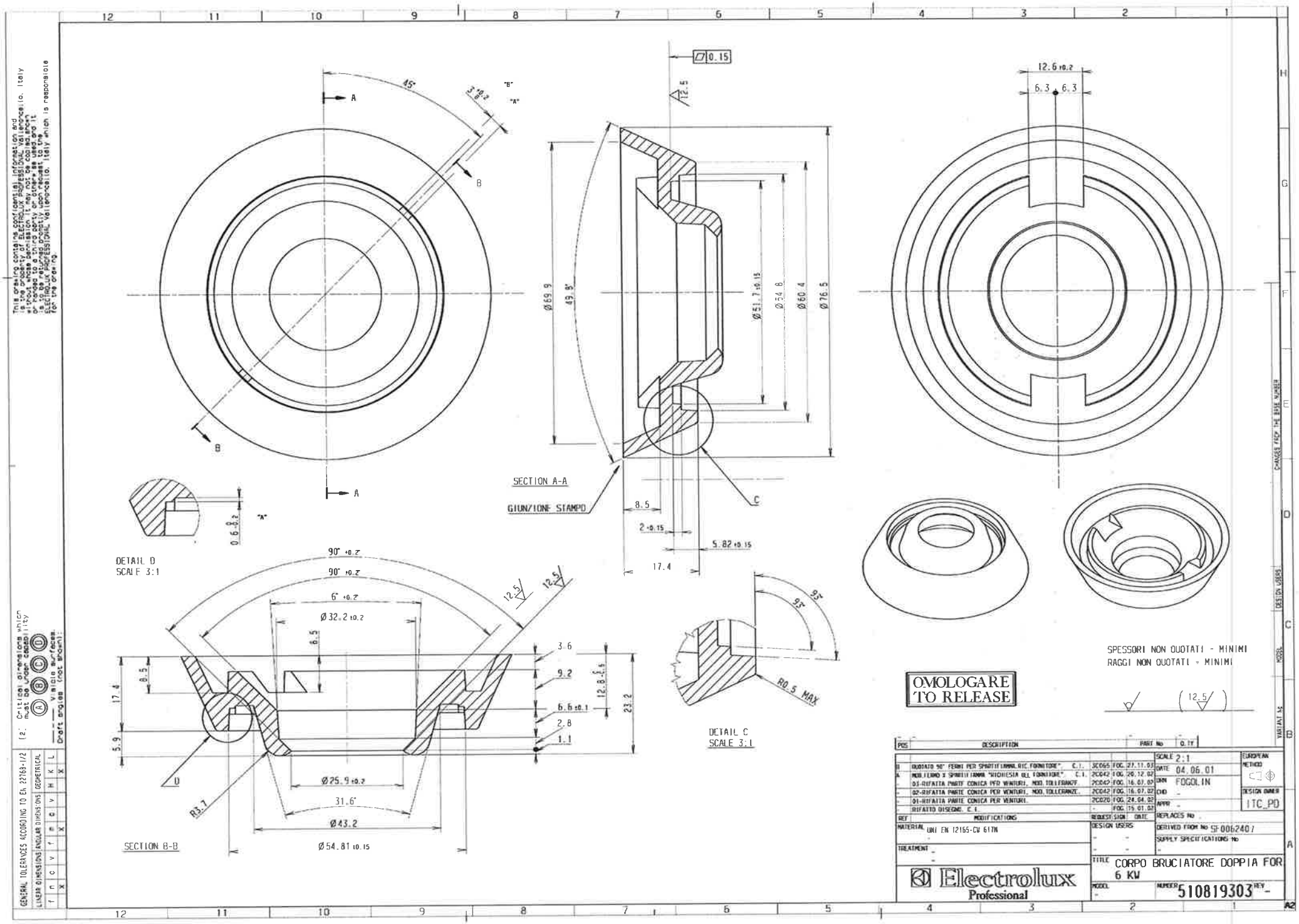

APPROVED: MORO - 27 Nov 2003

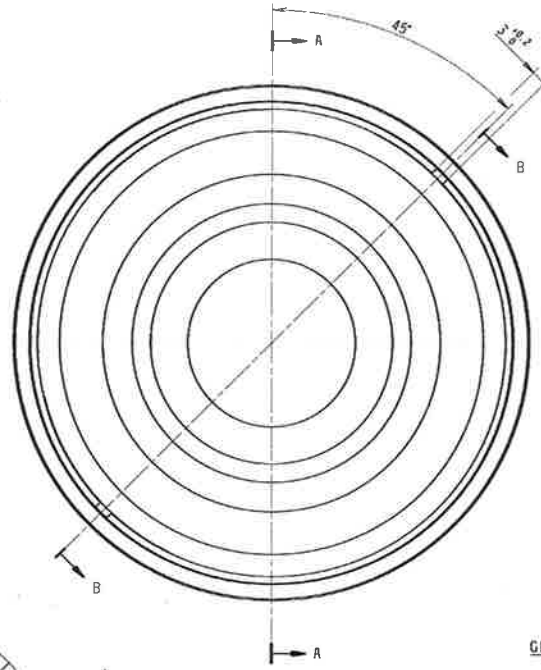

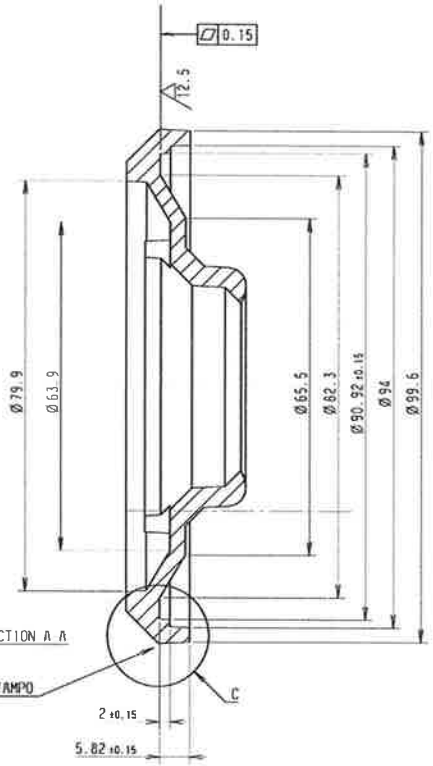

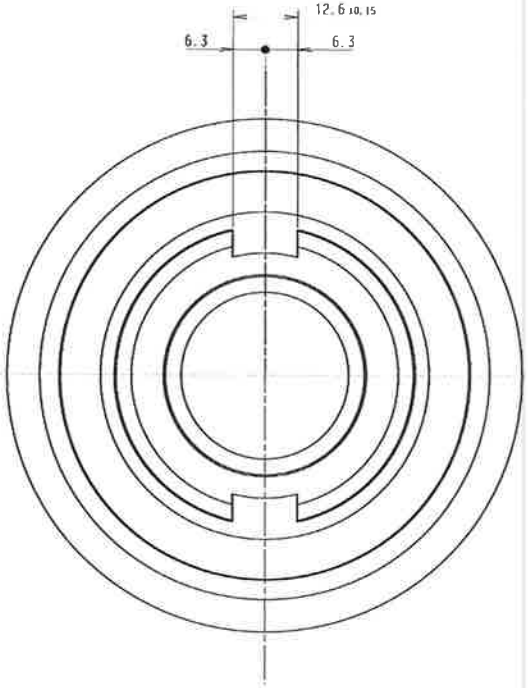

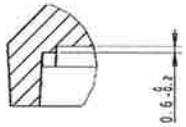

DETAIL D
SCALE 3:1

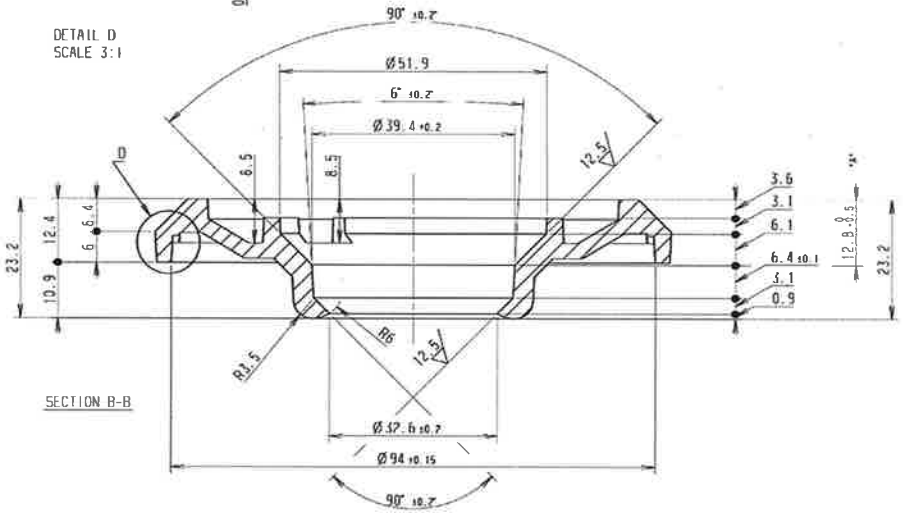

SECTION B-B

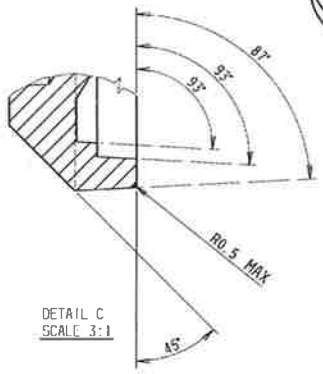

DETAIL C
SCALE 3:1

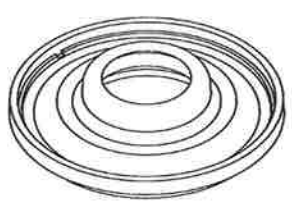

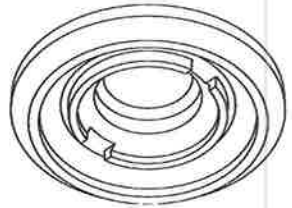

SPESSORI NON QUOTATI - MINIMI
RAGGI NON QUOTATI - MINIMI

(12.5)

OMOLOGARE
TO RELEASE

POS	DESCRIPTION	PART No	Q.TY
C	RUOTATO 90° SEDE PER SPINOTTIAMMA, RIC. FORNITORE, C.I.	2C065	
B	MOD.TERMI E SPINOTTIAMMA "RICHIESTA DEL FORNITORE", C.I.	2C042	
A	AGGIUNTA TOLLERANZA, C.I.	2C042	
-	03-RIFATTA PARTE CONICA PER VENTURI.	2C042	
-	02-RIFATTA PARTE CONICA PER VENTURI, MOD. TOLLERANZE.	2C042	
-	01-RIFATTA PARTE CONICA PER VENTURI.	2C020	
-	RIFATTO DISEGNO, C.I.	-	

REF	MODIFICATIONS	REQUEST SIGN	DATE

SCALE	1.5:1
DATE	04.06.01
DRN	FOGOLIN
CHD	-
APPR	-
REPLACES No	-
DERIVED FROM No	SF0062407
SUPPLY SPECIFICATIONS No	-
MATERIAL	UNI EN 12165-CW 617N
TREATMENT	-
DESIGN USERS	- - - -
TITLE	CORPO BRUCIATORE 10 KW SPECIALE
MODEL	-
NUMBER	510819203
REV	-
EUROPEAN METHOD	
DESIGN OWNER	ITC_PD

Electrolux Professional

GENERAL TOLERANCES ACCORDING TO EN 22768-1/2
LINEAR DIMENSIONS | ANGULAR DIMENSIONS | GEOMETRICAL

[2] Critical dimensions which must be under capability

Visible surfaces

Draft angles (not shown)

This drawing contains confidential information and is the property of ELECTROLUX PROFESSIONAL Vallenoncello, Italy and must not be used, reproduced or disclosed to others without the written permission of ELECTROLUX PROFESSIONAL Vallenoncello, Italy when no longer required for the purpose for which it was originally supplied. It is to be returned promptly on request to the ELECTROLUX PROFESSIONAL Vallenoncello, Italy when no longer required for the purpose for which it was originally supplied.

CHANGES FROM THE BASE NUMBER

DESIGN USERS

MODEL

VARIANT No

APPROVED: MORO - 27 Nov 2003

This drawing contains confidential information and is the property of ELECTROLUX PROFESSIONAL Vallenoncello, Italy without whose permission it may not be copied shown or handed to a third party or otherwise used and it is to be returned promptly upon request to the ELECTROLUX PROFESSIONAL Vallenoncello, Italy which is responsible for the drawing.

GENERAL TOLERANCES ACCORDING TO EN 22768-1/2 [2] Critical dimensions which must be under capability (A) (B) (C) (D)

LINEAR DIMENSIONS			ANGULAR DIMENSIONS		GEOMETRICAL				
f	m	c	v	f	m	c	v	H	K	L
	X				X				X	

Visible surfaces. Draft angles (not shown):

DISPOSIZIONE N° 48 FORI A

DISPOSIZIONE N° 12 FORI B

SECTION A-A

SECTION B-B

SECTION C-C

DETAIL D
SCALE 2.5:1

E' CONSENTITO ESEGUIRE UNO SMUSSO 0.8 X 45°

OMOLOGARE
TO RELEASE

TOLLERANZA SUI FORI = ± 0.04
RAGGI NON QUOTATI = MINIMI

REV	MODIFICATIONS	MODIFICATIONS	SIGN	DATE
C	AGG. SMUSSO 0.8 X 45° (RICHIESTA DEL FORNITORE". C.I.	3C065	FOG.	11.03.04
B	MOD. FERMO PER TAZZA "RICHIESTA DEL FORNITORE". C.I.	2C042	FOG.	20.12.02
A	CORRETTO DICITURA SU NUMERO FORI, MOD. DIAMETRO C.I.	2C042	FOG.	13.09.02
-	01-MOD. DISEGNO SU RICHIESTE FORNITORE.	2C042	FOG.	06.09.02

MATERIAL UNI EN 12165-CW 617N

TREATMENT -

DESIGN USERS

Electrolux Professional

SCALE 1.5:1 | EUROPEAN METHOD

DATE 01.06.01

DRN FOGOLIN

CHD -

APPR -

DESIGN OWNER ITC_PD

REPLACES No -

DERIVED FROM No SF0062300

SUPPLY SPECIFICATIONS No -

TITLE SPARTIFIAMMA DOPPIA FORATURA 6 KW

MODEL -

NUMBER 510819501 REV -

A3

APPROVED: PARONI - 12 Mar 2004

This drawing contains confidential information and is the property of ELECTROLUX PROFESSIONAL Vallenoncello, Italy without whose permission it may not be copied shown or handed to a third party or otherwise used and it is to be returned promptly upon request to the ELECTROLUX PROFESSIONAL Vallenoncello, Italy which is responsible for the drawing.

[2] Critical dimensions which must be under capability (A) (B) (C) (D)

Visible surfaces. Draft angles (not shown);

DISPOSIZIONE N° 24 + 24 FORI B

DISPOSIZIONE N° 20 FORI C

DISPOSIZIONE N° 20 + 20 FORI D

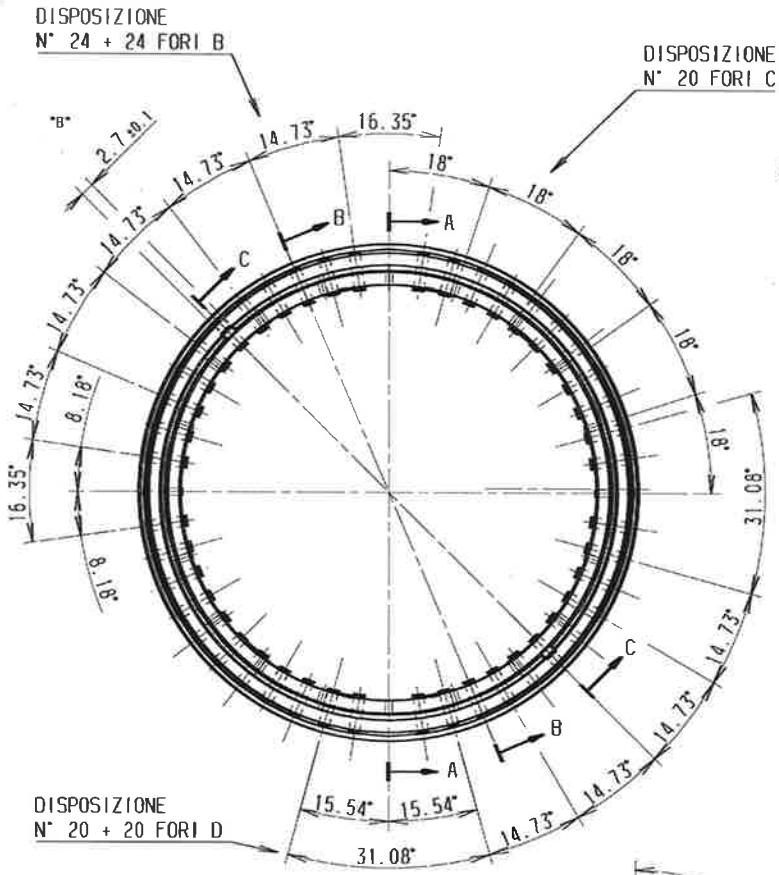

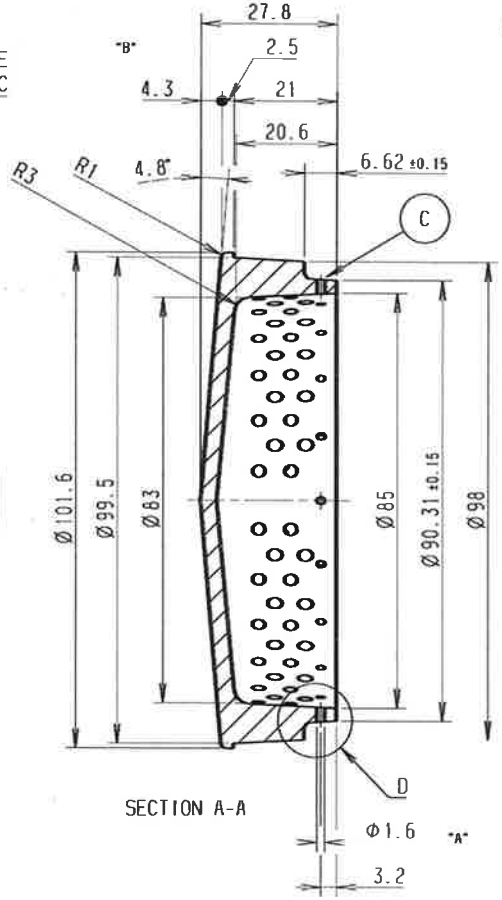

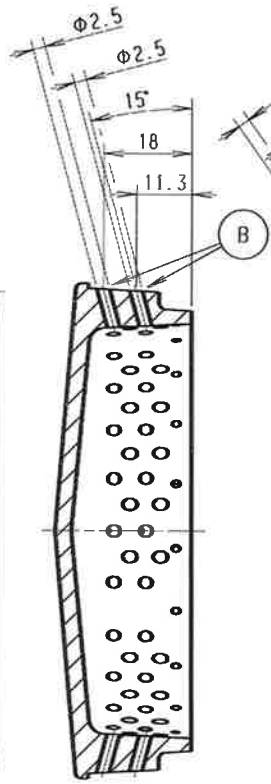

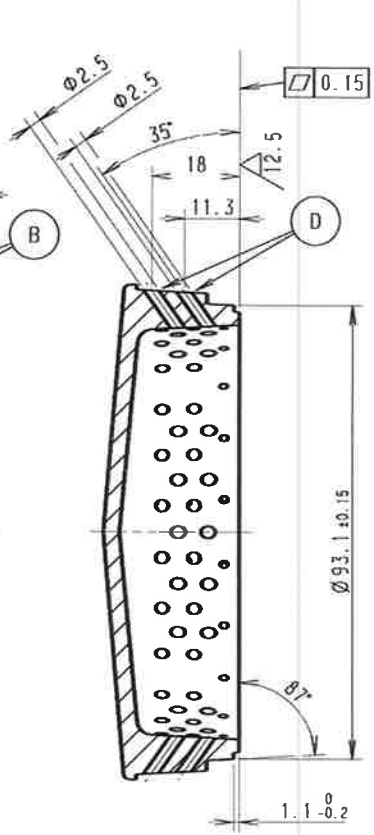

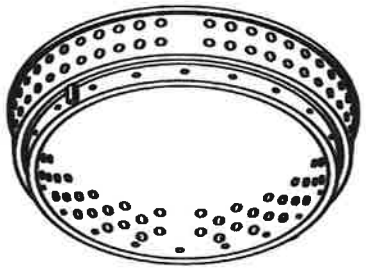

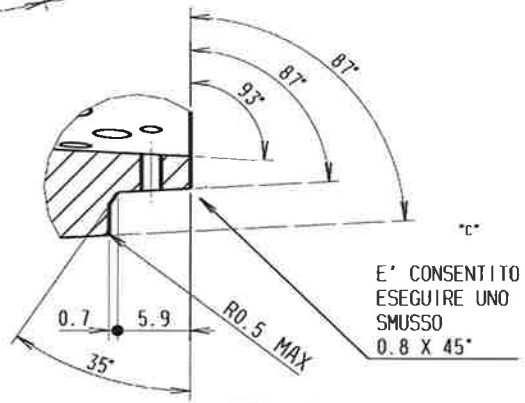

E' CONSENTITO ESEGUIRE UNO SMUSSO 0.8 X 45°

DETAIL D
SCALE 2.5:1

OMOLOGARE
TO RELEASE

TOLLERANZA SUI FORI = ± 0.04
RAGGI NON QUOTATI = MINIMI

12.5

REF	MODIFICATIONS	REQUEST	SIGN	DATE
C	AGG.SMUSSO 0.8 X 45°° RICHIESTA DEL FORNITORE°. C.I.	3C065	FOG.	11.03.04
B	MOD.FERMO PER TAZZA °RICHIESTA DEL FORNITORE°. C.I.	2C042	FOG.	20.12.02
A	MOD.DIAMETRO FORI. C.I.	2C042	FOG.	13.09.02
-	01-MOD.DISEGNO SU RICHIESTE FORNITORE.	2C042	FOG.	06.09.02

MATERIAL UNI EN 12165-CW 617N

TREATMENT

DESIGN USERS

SCALE 1:1 (2.5:1)
DATE 21.09.01
DRN FOGOLIN
CHD
APPR
REPLACES No
DERIVED FROM No SF0057107
SUPPLY SPECIFICATIONS No

EUROPEAN METHOD

DESIGN OWNER ITC_PD

Electrolux Professional

TITLE SPARTIFIAMMA DOPPIA FOR. 10 KW

MODEL

NUMBER 510819401 REV -

GENERAL TOLERANCES ACCORDING TO EN 22768-1/2												
LINEAR DIMENSIONS	f	m	c	v	f	m	c	v	ANGULAR DIMENSIONS	H	K	L
	X					X			GEOMETRICAL			X

APPROVED: PARONI - 12 Mar 2004

This drawing contains confidential information and is the property of ELECTROLUX PROFESSIONAL Vallenoncello, Italy without whose permission it may not be copied, shown or handed to a third party or otherwise used, and it is to be returned promptly upon request to the ELECTROLUX PROFESSIONAL Vallenoncello, Italy which is responsible for the drawing.

2. Critical dimensions which must be under capability Ⓐ Ⓑ Ⓒ Ⓓ — Visible surfaces. Draft angles (not shown):

GENERAL TOLERANCES ACCORDING TO EN 22768-1/2

LINEAR DIMENSIONS	f	m	c	v	f	ANGULAR DIMENSIONS	m	c	v	GEOMETRICAL	H	K	L
	X						X					X	

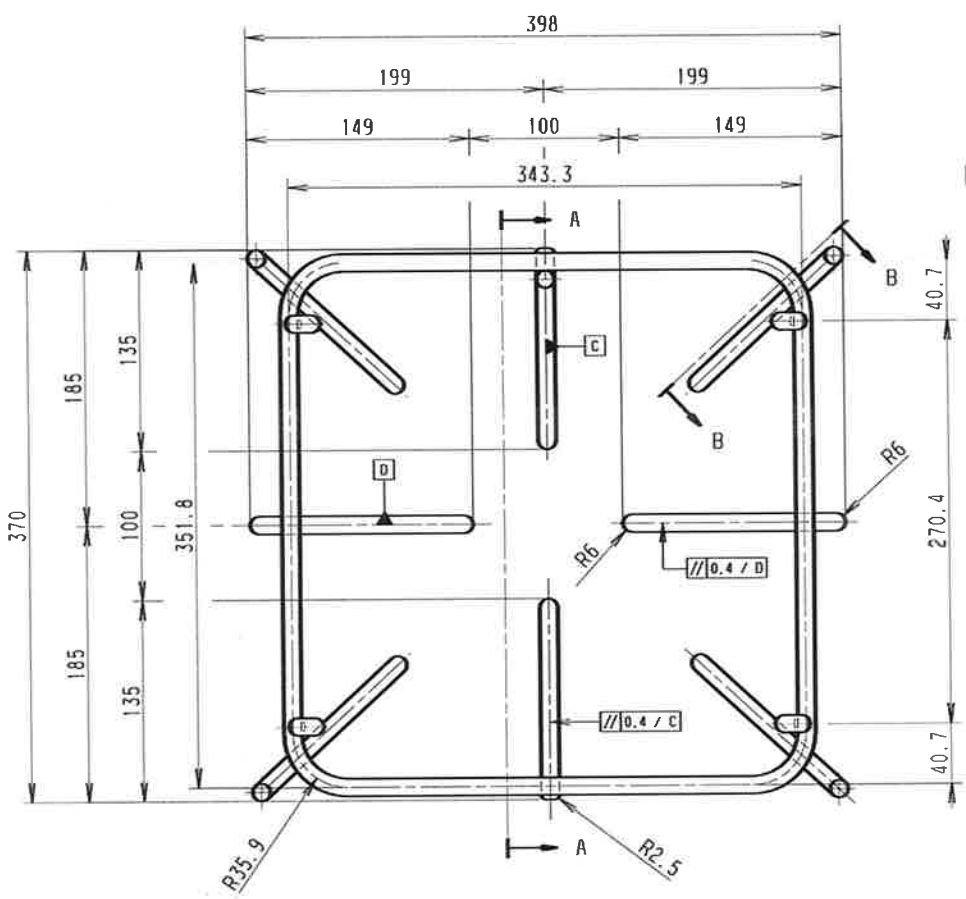

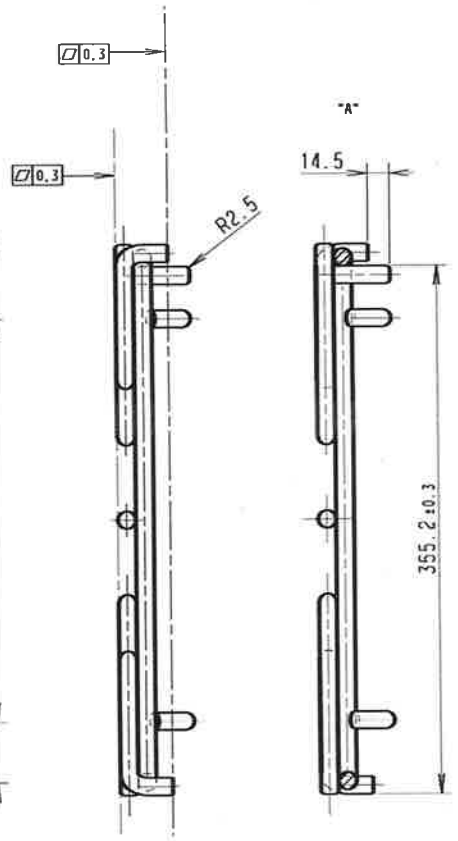

SECTION A-A

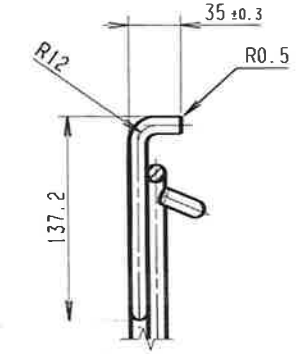

SECTION B-B

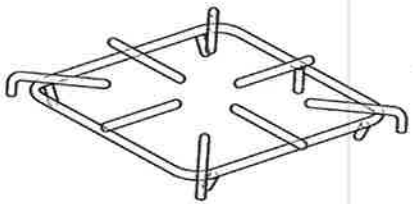

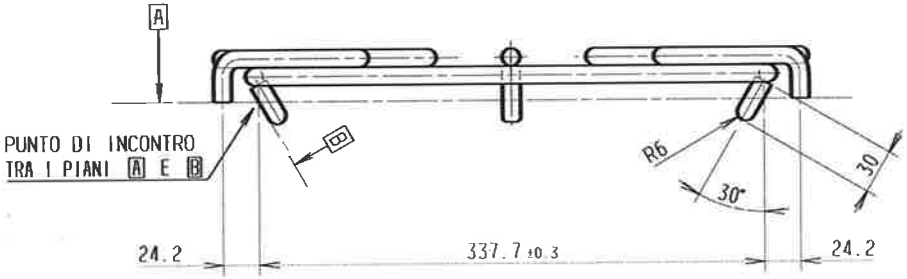

TUTTI I COMPONENTI DEVONO ESSERE SALDATI TRA LORO IN MANIERA ROBUSTA
* LE RAZZE DEVONO RESISTERE SENZA STACCARSI AD UNA COPPIA DI 130 Nm
E LA FINITURA DEVE AVERE UN ASPETTO ESTETICAMENTE GRADEVOLE

POS	DESCRIPTION	PART No	Q.TY

REF	MODIFICATIONS	REQUEST	SIGN	DATE
B	07-AGG. TOLLERANZE E NOTA PER RESISTENZA MECCANICA.	3C065	FOG.	26.10.06
A	06-MOD. PERNETTO DI FERMO.	3C044	FOG.	09.10.03
-	05-MOD. PUNTE RAZZE.	3C001	FOG.	19.03.03
-	MODIFICATO MATERIALE (ERA AISI 304). C.I.	2C042	FOG.	17.10.02
-	03-MODIFICATO DISEGNO.	2C033	FOG.	12.09.02
-	02-MODIFICATO DISEGNO SECONDO RICHIESTE FORNITORE.	2C033	FOG.	10.06.02
-	01-RIFATTO DISEGNO.	2C020	FOG.	15.04.02

MATERIAL Tondo 12 EN 10277-3-1.4306
AISI 304 L Ø 12

TREATMENT LUCIDATO ELETTROLITICAMENTE
-

DESIGN USERS
- -
- -

SCALE 1:3
DATE 31.03.01
DRN FOGOLIN
CHD -
APPR -
REPLACES No -

EUROPEAN METHOD

DESIGN OWNER ITC_PD

DERIVED FROM No SF0058700
SUPPLY SPECIFICATIONS No -

TITLE GRIGLIA MONOFUOCO ZANUSSI

Electrolux Professional

MODEL N900
NUMBER 510819608
REV -

CHANGES FROM THE BASE NUMBER | DESIGN USERS | MODEL | VARIANT No

A3

APPROVED: PARONI - 30 Oct 2006

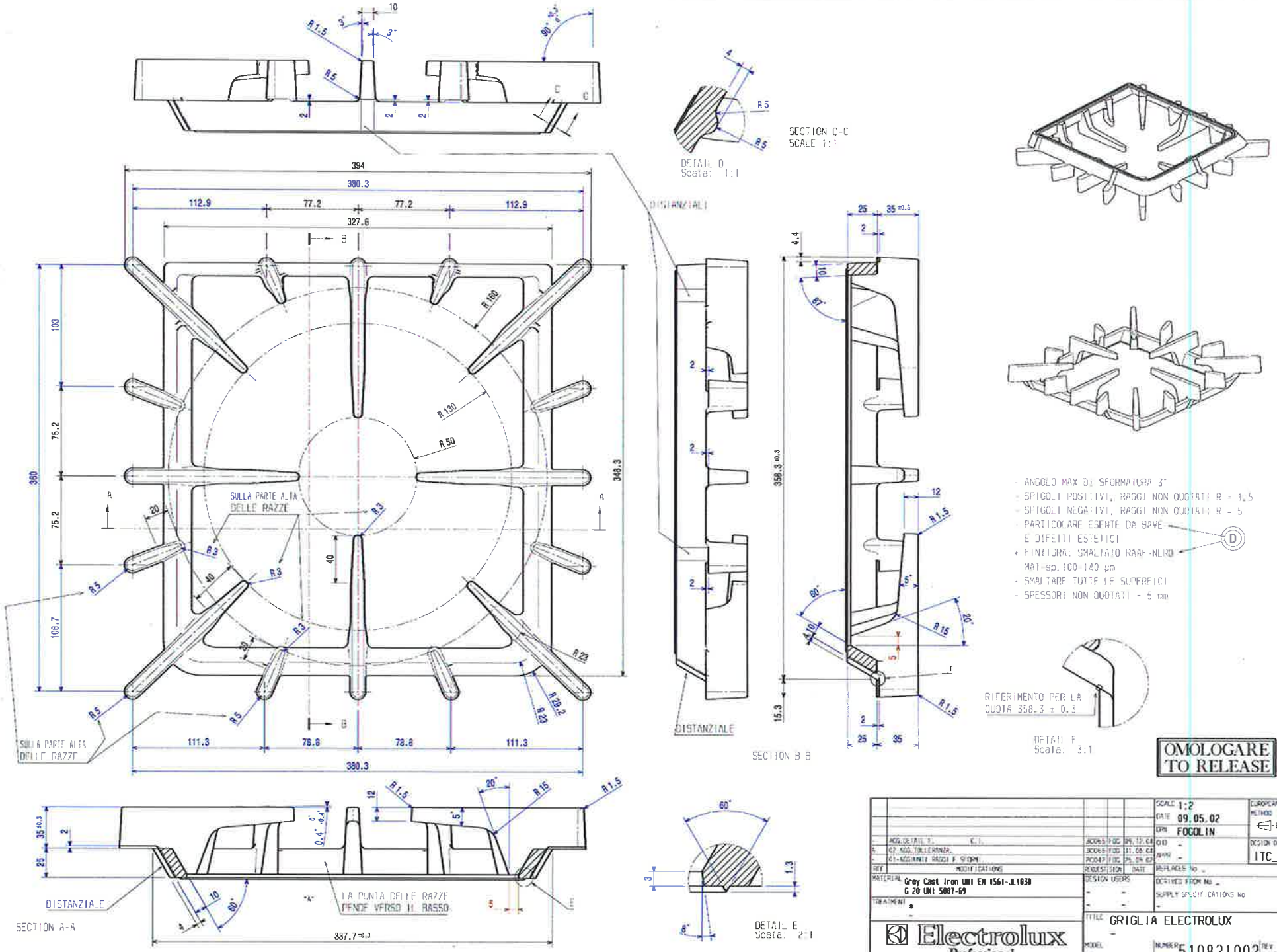
SECTION C-C
SCALE 1:1
DETAIL D
Scale: 1:1
DISTANZIALI
DISTANZIALE
SECTION B-B
DETAIL F
Scale: 3:1
RIFERIMENTO PER LA QUOTA 358.3 ± 0.3
- ANGOLO MAX DI SFORMATURA 3°
- SPIGOLI POSITIVI, RAGGI NON QUOTATI R = 1.5
- SPIGOLI NEGATIVI, RAGGI NON QUOTATI R = 5
- PARTICOLARE ESENTE DA BAVE E DIFETTI ESTETICI
- FINITURA: SMALTATO RAL 9005
MAT. sp. 100-140 µm
- SMALTARE TUTTE LE SUPERFICI
- SPESSORI NON QUOTATI = 5 mm
SULLA PARTE ALTA DELLE RAZZE
SECTION A-A
LA PUNTA DELLE RAZZE PENDE VERSO IL BASSO
DETAIL E
Scale: 2:1
OMOLOGARE TO RELEASE
SCALE 1:2
DATE 09.05.02
DRN FOGOLIN
DESIGN OWNER ITC_PD
EUROPEAN METHOD
MATERIAL Grey Cast Iron UNI EN 1561-JL1030 G 20 UNI 5007-69
TREATMENT *
DESIGN USERS
DERIVED FROM NO -
SUPPLY SPECIFICATIONS NO -
REPLACES NO -
TITLE GRIGLIA ELECTROLUX
MODEL -
NUMBER 510821002
REV -
Electrolux Professional

This drawing contains confidential information and is the property of ELECTROLUX PROFESSIONAL Vallenoncello. Italy without whose permission it may not be copied, shown or handed to a third party or otherwise used, and it is to be returned promptly upon request to the ELECTROLUX PROFESSIONAL Vallenoncello. Italy which is responsible for the drawing.

[2] Critical dimensions which must be under capability (A)(B)(C)(D)

Visible surfaces.
Draft angles (not shown):

GENERAL TOLERANCES ACCORDING TO EN 22768-1/2

LINEAR DIMENSIONS	ANGULAR DIMENSIONS	GEOMETRICAL
f	m	c	v	f	m	c	v	H	K	L
	X				X				X	

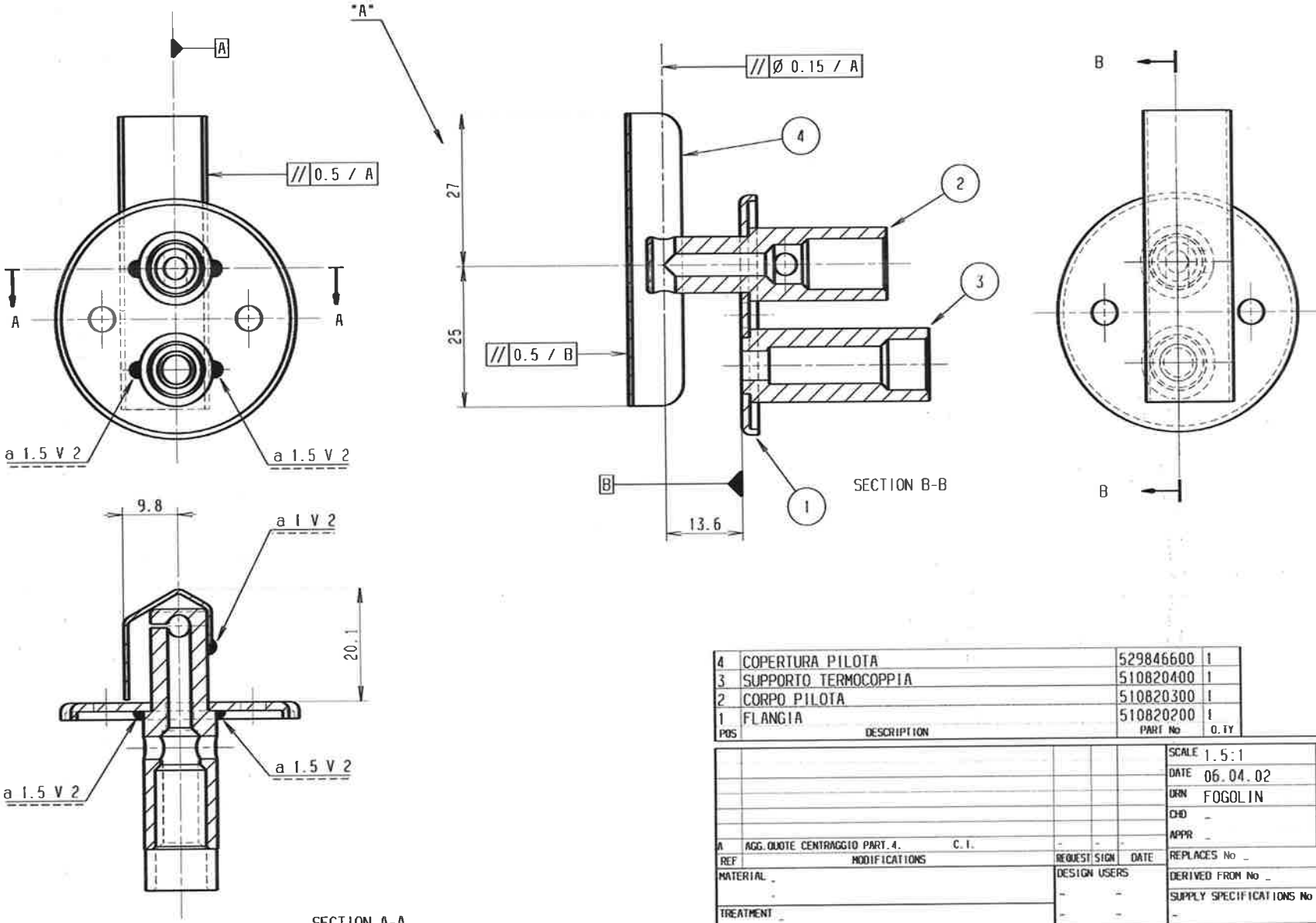

POS	DESCRIPTION	PART No	Q.TY
4	COPERTURA PILOTA	529846600	1
3	SUPPORTO TERMOCOPPIA	510820400	1
2	CORPO PILOTA	510820300	1
1	FLANGIA	510820200	1

REF	MODIFICATIONS	REQUEST	SIGN	DATE
A	AGG.QUOTE CENTRAGGIO PART.4. C.I.	-	-	-

MATERIAL -

TREATMENT -

Electrolux Professional

DESIGN USERS
- -
- -

SCALE 1.5:1
DATE 06.04.02
DRN FOGOLIN
CHD -
APPR -

EUROPEAN METHOD

DESIGN OWNER ITC_PD

REPLACES No -
DERIVED FROM No -
SUPPLY SPECIFICATIONS No -

TITLE ASS.PILOTA FUOCHI APERTI

MODEL N900

NUMBER 806820900 REV -

CHANGES FROM THE BASE NUMBER | DESIGN USERS | MODEL | VARIANT No

A3

APPROVED: MORO - 15 Mav 2002

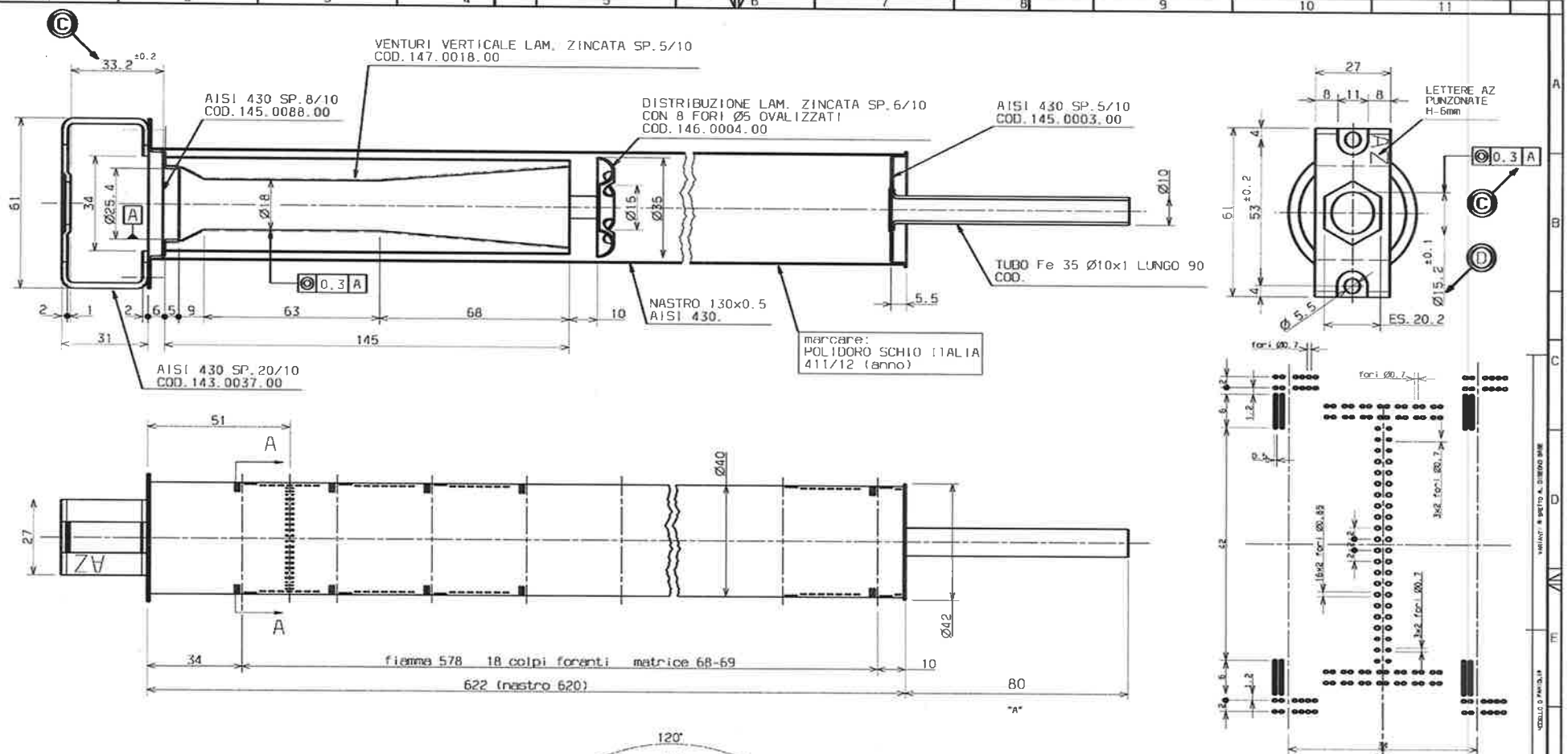

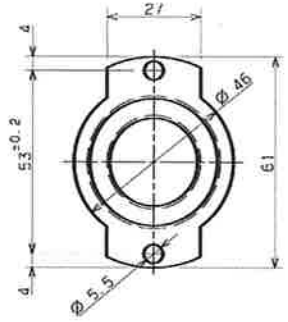

FLANGIA VENTURI AISI 430 SP.8/10
COD.145.0088.00

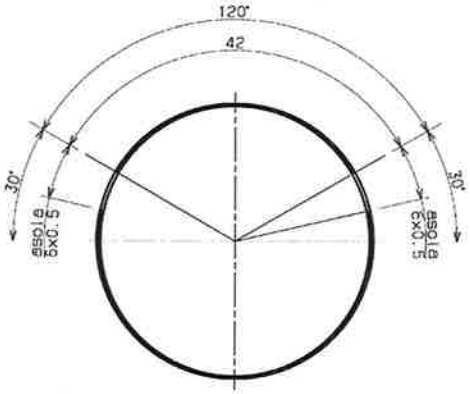

SEZ.A-A SCALA 2:1

BRUCIATORE POLIDORO 411/12

RIF.	MODIFICHE	DATA	FIRMA
01	IDENTIFICATE CARATTERISTICHE	01/08/91	MARTIN
2C020	A-02-ACCORCIATO IL PERNO DI 5 mm.	15.05.02	FOGOLIN

TOLLERANZE GENERALI
UNI EN 22768-1 ± 30'
SCALA 1:1
DATA 06/12/90
DISEGNATO POLESEL

BRUCIATORE FORNO 8.5KW

Electrolux Zanussi G.I.
- ITALIA -

HD

830860902

LA ZANUSSI GRANDI IMPIANTI S.P.A. SI RISERVA A TERMINI DI LEGGE LA PROPRIETA' DEL PRESENTE DISEGNO CON DIVIETO DI RIPRODURLO O DIVULGARLO SENZA SUA PREVIA AUTORIZZAZIONE

SVILUPPO C PESO

APPROVED: MORO - 20 May 2002

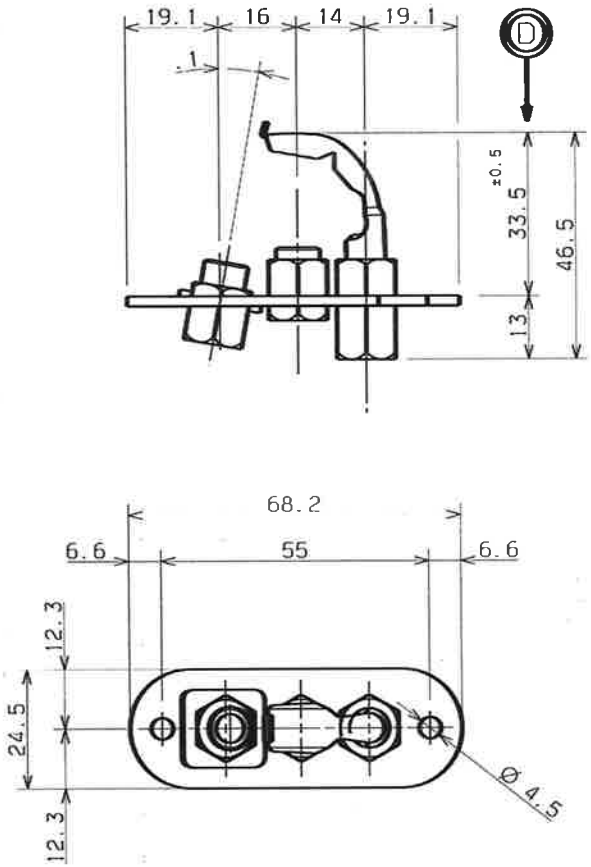

NOTE:
- MATERIALE PIASTRINA E CORPI ESAGONALI = ACCIAIO ZINCATO
- MATERIALE CANNELLO = ACCIAIO INOSSIDABILE
- UGELLO: NO
- RACCORDI PER CONDUTTURA, TERMOCOPPIA E CANDELINA: NO
- RICAVATO DAL COD.SIT 0.140.106

POS.	DENOMINAZIONE	CODICE COMPONENTE	Q.TA'

RIF.	MODIFICHE	DATA	FIRMA
3C001	01-MOD.FINITURA SUPERFICIALE.	07.03.03	FOGOLIN

TOLLERANZE GENERALI
LUNGHEZZE ±½ IT 14 UNI6387 — ANGOLI ± 30'
SCALA 1:1
CAPITOLATO
SOST.SCE IL
~~SOST.TO~~ RICA.TO DAL SIT 0140104
DATA
DISEGNATO FOGOLIN
CONTROLLATO

MATERIALE
STATO

DENOMINAZIONE: ASSIEME PILOTA A UNA FIAMMA

Electrolux Zanussi G.I.
- ITALIA -

MOD.

CODICE: 830884101

1 cm

CICLO
DATA

SVILUPPO O PESO
TEORICO
PRATICO

VARIANTI RISPETTO AL DISEGNO BASE
MODELLO O FAMIGLIA
CODICE DERIVATO

LA ZANUSSI GRANDI IMPIANTI S.P.A. SI RISERVA A TERMINI DI LEGGE, LA PROPRIETA' DEL PRESENTE DISEGNO CON DIVIETO DI RIPRODURLO O DIVULGARLO SENZA SUA PREVIA AUTORIZZAZIONE

APPROVED: MORO - 24 Mar 2003

This drawing contains confidential information and is the property of ELECTROLUX PROFESSIONAL Vallenoncello,Italy without whose permission it may not be copied,shown or handed to a third party or otherwise used and it is to be returned promptly upon request to the ELECTROLUX PROFESSIONAL Vallenoncello,Italy which is responsible for the drawing.

SUPERFICI IN VISTA
VISIBLE SURFACES

RoHS 2002/95/EC

IL COMPONENTE DEVE ESSERE CONFORME ALLA DIRETTIVA
THE COMPONENT MUST BE COMPLIANT TO STANDARDS

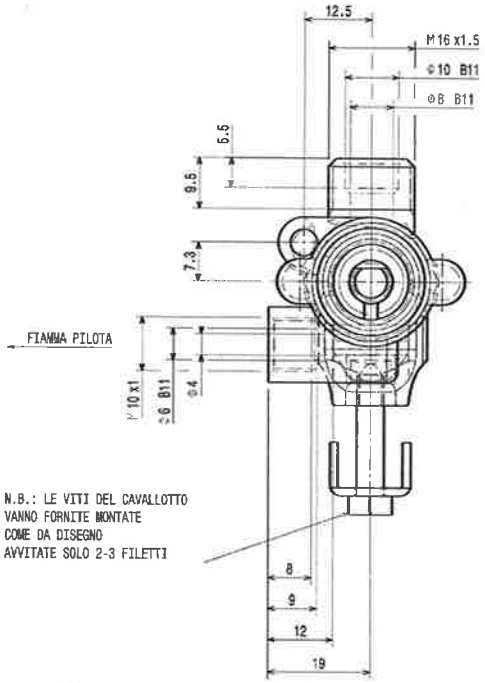

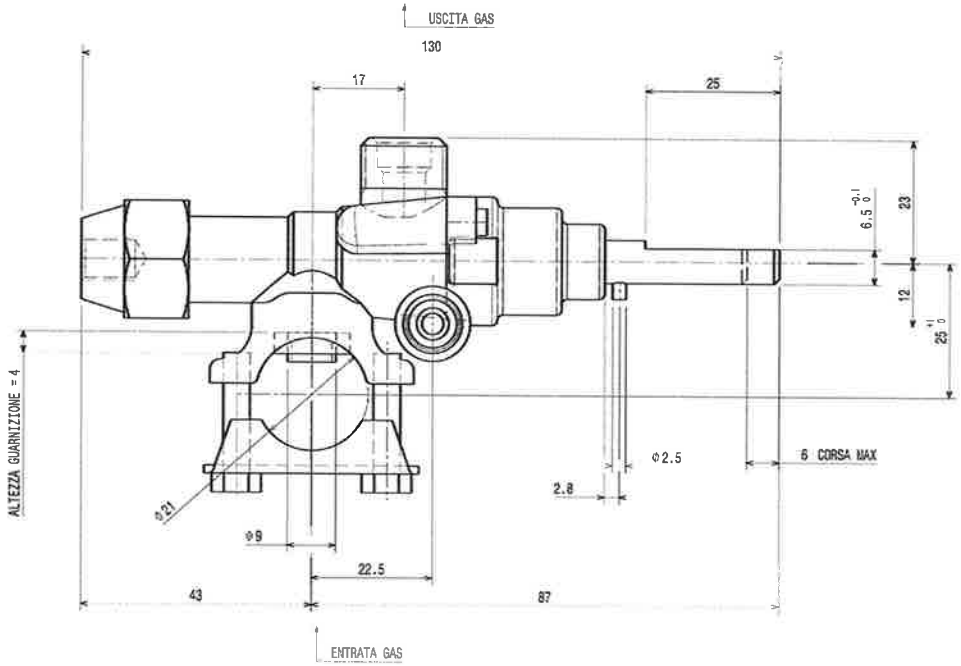

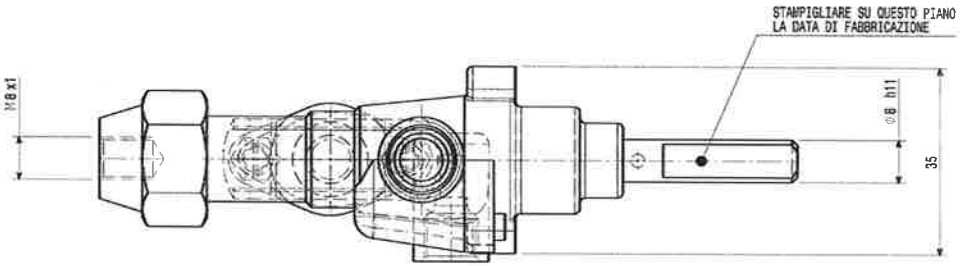

(B) N.B.: QUANDO SI SOSTITUISCE LA VITE DI MINIMO BISOGNA INGRASSARE ACCURATAMENTE CON GRASSO "STABURAGS N. 32" L'ANELLO DI TENUTA O-RING DELLA NUOVA VITE PRIMA DI MONTARLA.

(B)
- TEMPERATURA DI UTILIZZO = 0 - 125 °C
- RIPORTARE L'INDICAZIONE DELL'APPROVAZIONE DIN-DVGW E CE
- RUBINETTO DISEGNATO IN POSIZIONE CHIUSO
- PARTICOLARE RICAVATO DA DISEGNO PINTOSSI TIPO: Mod. 21-S
- TENSIONE MINIMA DI TENUTA DEL MAGNETE = 1 mV
- BY PASS Ø = 00

REV	MODIFICATIONS	REQ.	SIGN	DATE
A	02 - MOD. ALTEZZA GUARNIZIONE.	00103	Fogolin	02/09/2009
A	01 - MOD. TOLLERANZA ALL'ALBERO CORE INDICATO. C.I.	00065	Fogolin	25/01/2005
A	01 - MOD. DISEGNO CORE PEZZO. C.I.	00023	Fogolin	07/05/2003
A	01 - MOD. PERNO. ALLUNGATO ED ELIMINATA FRESATURA.	20042	Fogolin	08/12/2002

GENERAL TOLERANCES UNI EN 22768-1/2
MATERIAL:
TREATMENT:
SUPPLY SPECIFICATIONS Nr | DERIVED FROM Nr | REPLACES Nr
ESENTE DA BAVE E SPIGOLI TAGLIENTI
FREE OF BURRS AND CUTTING EDGES (1) (A)

DESCRIPTION: RUBINETTO GAS PEL 21-S CON BRIGLIA

Electrolux Professional Modular Cooking

EUROPEAN METHOD | PART Nr 835857202 | REV A

SCALE
DATE 21/09/2009
DRN S.Fogolin
CHD
APPR E.Marzinotto

A2

This drawing contains confidential information and is the property of ELECTROLUX PROFESSIONAL Vallenoncello,Italy without whose permission it may not be copied,shown or handed to a third party or otherwise used and it is to be returned promptly upon request to the ELECTROLUX PROFESSIONAL Vallenoncello,Italy which is responsible for the drawing.

SUPERFICI IN VISTA
VISIBLE SURFACES

RoHS 2002/95/EC

IL COMPONENTE DEVE ESSERE CONFORME ALLA DIRETTIVA
THE COMPONENT MUST BE COMPLIANT TO STANDARDS

	CODICE	DIAMETRO	STAMP.
	516817300	0.70 ±0.010	70
	516817400	0.75 ±0.010	75
	516817500	0.80 ±0.011	80
	A05157200	0.85 ±0.012	85
	A05659000	0.90 ±0.013	90
	A05178500	0.95 ±0.013	95
	514890400	1.00 ±0.020	100
	A05659100	1.05 ±0.021	105
	A05157400	1.10 ±0.022	110
	A05157500	1.15 ±0.023	115
	A05661500	1.20 ±0.024	120
	A05158000	1.25 ±0.025	125
	516809800	1.30 ±0.026	130
	A05583000	1.35 ±0.027	135
	A05157600	1.40 ±0.028	140
	A05158800	1.45 ±0.029	145
	A05661600	1.50 ±0.030	150
	A05177600	1.55 ±0.031	155
	A05157700	1.60 ±0.032	160
	A05230300	1.65 ±0.033	165
	A05659300	1.70 ±0.034	170
	514884600	1.75 ±0.035	175
	A05157900	1.80 ±0.036	180
	A05176400	1.85 ±0.037	185
	A05661700	1.90 ±0.038	190
	A05178000	1.95 ±0.039	195
	A05158100	2.00 ±0.040	200
	A05620700	2.05 ±0.041	205
	A05158200	2.10 ±0.042	210
	A05661900	2.15 ±0.043	215
	A05176200	2.20 ±0.044	220
	A05659400	2.25 ±0.045	225
	A05158300	2.30 ±0.046	230
	A05662000	2.35 ±0.047	235
	A05158400	2.40 ±0.048	240
	A05176000	2.45 ±0.049	245
	A05659500	2.50 ±0.050	250
	514895900	2.55 ±0.051	255
	A05158500	2.60 ±0.052	260
	A05307000	2.65 ±0.053	265
	A05230100	2.70 ±0.054	270
	A05662100	2.75 ±0.055	275
	A05662200	2.80 ±0.056	280
	514880400	2.85 ±0.057	285
	A05307100	2.90 ±0.058	290

	CODICE	DIAMETRO	STAMP.
	516815600	2.95 ±0.059	295
	A05177200	3.00 ±0.060	300
	516815700	3.05 ±0.061	305
	A05158600	3.10 ±0.062	310
	514888500	3.15 ±0.063	315
	516815800	3.20 ±0.064	320
	516814700	3.25 ±0.065	325
	A05230200	3.30 ±0.066	330
	516815900	3.35 ±0.067	335
	516813100	3.40 ±0.068	340
	A05158700	3.45 ±0.069	345
	514887800	3.50 ±0.070	350
	514893900	3.55 ±0.071	355
	A05659600	3.60 ±0.072	360
	514888600	3.65 ±0.073	365
	A05177300	3.70 ±0.074	370
	514887900	3.75 ±0.075	375
	516815100	3.80 ±0.076	380
	514880300	3.85 ±0.077	385
	516816000	3.90 ±0.078	390
	514888700	3.95 ±0.079	395
	A05257100	4.00 ±0.080	400
	514888800	4.05 ±0.081	405
	516816100	4.10 ±0.082	410
	516813500	4.15 ±0.083	415
	A05257200	4.20 ±0.084	420
	514888900	4.25 ±0.085	425
	516816200	4.30 ±0.086	430
	516816300	4.35 ±0.087	435
	A05177500	4.40 ±0.088	440
	516816400	4.45 ±0.089	445
	516816500	4.50 ±0.090	450
	A05257300	4.55 ±0.091	455
	514888100	4.60 ±0.092	460
a)	516879800	4.65 ±0.093	465
	516832800	4.70 ±0.094	470
		4.75 ±0.095	475
	514888000	4.80 ±0.096	480
		4.85 ±0.097	485
	514880500	4.90 ±0.098	490
		4.95 ±0.099	495
	A05177400	5.00 ±0.100	500
		5.05 ±0.101	505
		5.10 ±0.102	510
		5.15 ±0.103	515

	CODICE	DIAMETRO	STAMP.
	A05256500	5.20 ±0.104	520
		5.25 ±0.105	525
		5.30 ±0.106	530
		5.35 ±0.107	535
	516867900	5.40 ±0.108	540
		5.45 ±0.109	545
	A05177700	5.50 ±0.110	550
		5.55 ±0.111	555
	516832900	5.60 ±0.112	560
	516833000	5.65 ±0.113	565
	516839200	5.70 ±0.114	570
		5.75 ±0.115	575
	A05662600	5.80 ±0.116	580
		5.85 ±0.117	585
	516839300	5.90 ±0.118	590
		5.95 ±0.119	595
	514884500	6.00 ±0.120	600
		6.05 ±0.121	605
		6.10 ±0.122	610
		6.15 ±0.123	615
	A05177900	6.20 ±0.124	620
	514880100	6.25 ±0.125	625
	516839400	6.30 ±0.126	630
		6.35 ±0.127	635
		6.40 ±0.128	640
		6.45 ±0.129	645
	A05257400	6.50 ±0.130	650
		6.55 ±0.131	655
	514889000	6.60 ±0.132	660
		6.65 ±0.133	665
		6.70 ±0.134	670

	CODICE	DIAMETRO	STAMP.
	514889100	6.75 ±0.135	675
		6.80 ±0.136	680
		6.85 ±0.137	685
		6.90 ±0.138	690
		6.95 ±0.139	695
b)	A05178401	7.00 ±0.140	700
	514888300	7.25 ±0.145	725

"c"

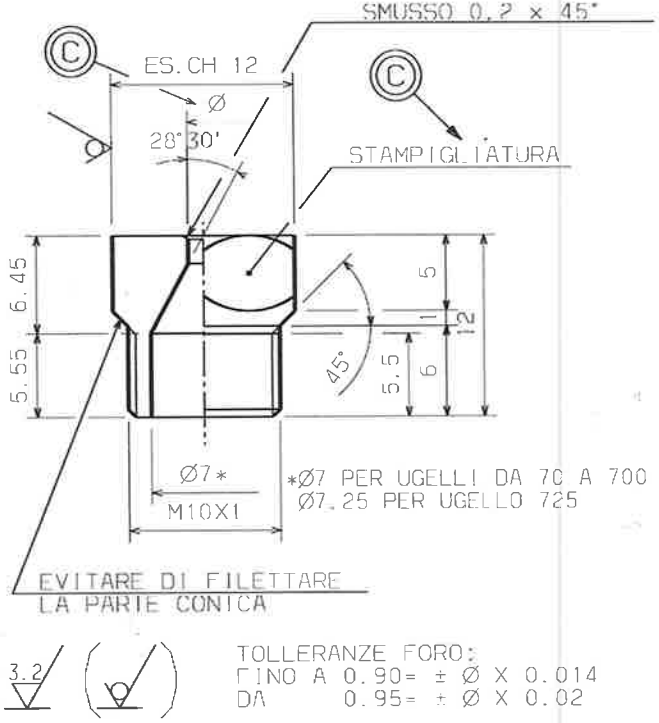

MATERIALE: P Cu Zn 40 Pb2 UNI 5705

REV	MODIFICATIONS	REQ.	SIGN	DATE
c	09 - AGG. SMUSSO 0.2 X 45. ADEGUATO DISEGNO A PEZZO. C.I.	M0113	Fogolin	01/10/2009
b	09 - C.I. - RIAVANZATO UGELLO D.7.00 - RIDIS. CATIA 5	M0113	FADEL	05/08/2009
a	09 - C.I. - AGGIUNTO UGELLO D. 4.65		FRANZOSO	03/11/2004

GENERAL TOLERANCES UNI EN 22768-1/2 m K

SCALE
DATE 05/08/2009
DRN U.Fadel
CHD
APPR E.Marzinotto

MATERIAL: Vedi disegno/look at the drawing
TREATMENT:
SUPPLY SPECIFICATIONS Nr | DERIVED FROM Nr | REPLACES Nr

ESENTE DA BAVE E SPIGOLI TAGLIENTI
FREE OF BURRS AND CUTTING EDGES (1) (A)

DESCRIPTION PROSPETTO UGELLI ESAGONALI

Electrolux Professional
Modular Cooking

EUROPEAN METHOD | PART Nr A05157009 | REV c

A3

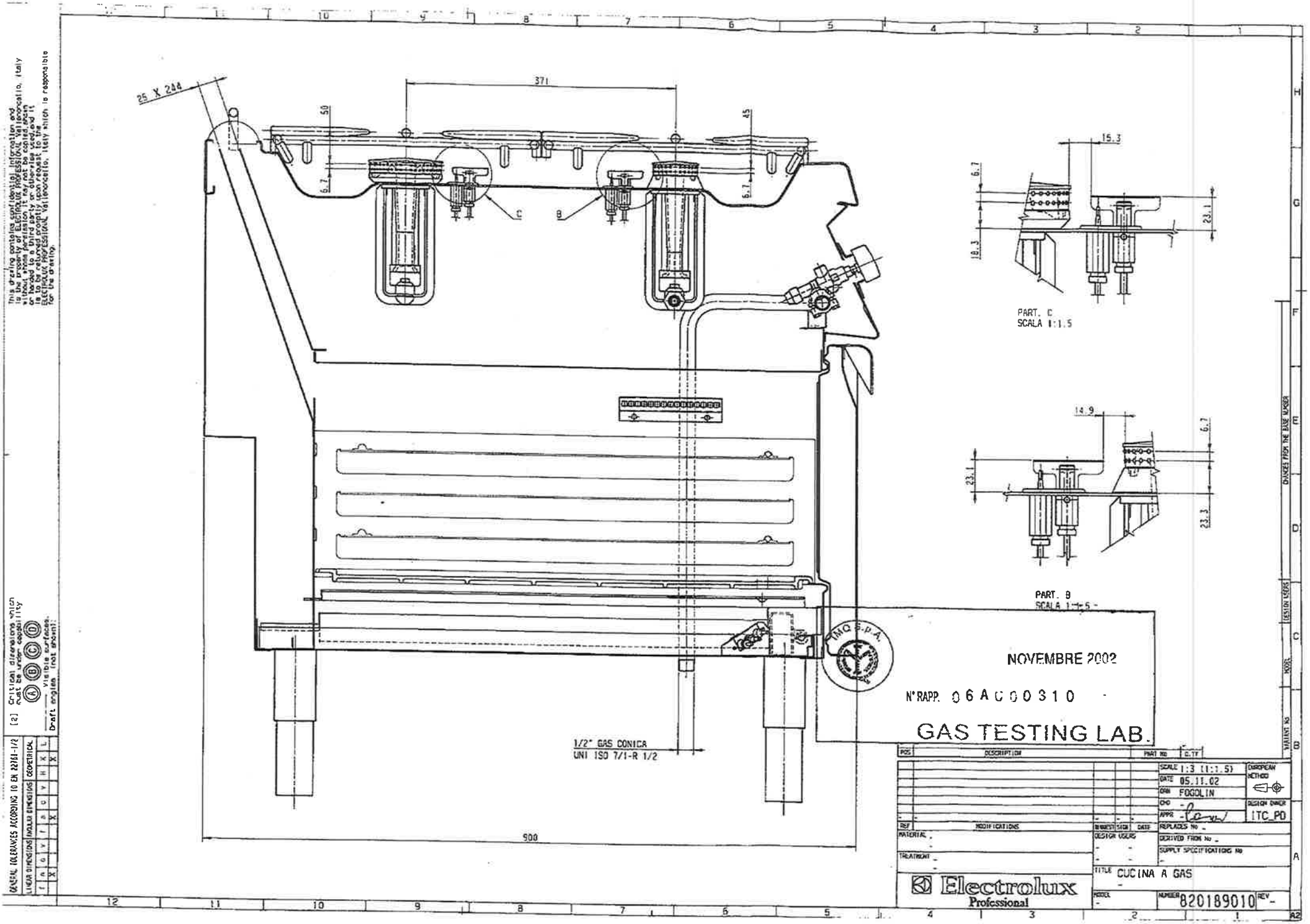

25 X 244
371
50
45
6.7
6.7
C
B
15.3
6.7
18.3
23.1
PART. C
SCALA 1:1.5
14.9
6.7
23.1
23.3
PART. B
SCALA 1:1.5
1/2" GAS CONICA
UNI ISO 7/1-R 1/2
900
IMQ S.P.A.
NOVEMBRE 2002
N°RAPP. 06AC00310
GAS TESTING LAB.
POS
DESCRIPTION
PART No
Q.TY
SCALE 1:3 (1:1.5)
DATE 05.11.02
DRN FOGOLIN
CHD
APPR
EUROPEAN METHOD
DESIGN OWNER
ITC_PD
REF
MODIFICATIONS
REPLACES No
DERIVED FROM No
SUPPLY SPECIFICATIONS No
MATERIAL
TREATMENT
DESIGN USERS
TITLE CUCINA A GAS
Electrolux Professional
MODEL
NUMBER 820189010
REV
A2
GENERAL TOLERANCES ACCORDING TO EN 22768-1/2
LINEAR DIMENSIONS
ANGULAR DIMENSIONS
GEOMETRICAL
[2] Critical dimensions which must be under capability
Visible surfaces.
Draft angles (not shown).
This drawing contains confidential information and is the property of ELECTROLUX PROFESSIONAL Vallenoncello, Italy without whose permission it may not be copied, shown or handed to a third party or otherwise used, and it is to be returned promptly upon request to the ELECTROLUX PROFESSIONAL Vallenoncello, Italy which is responsible for the drawing.

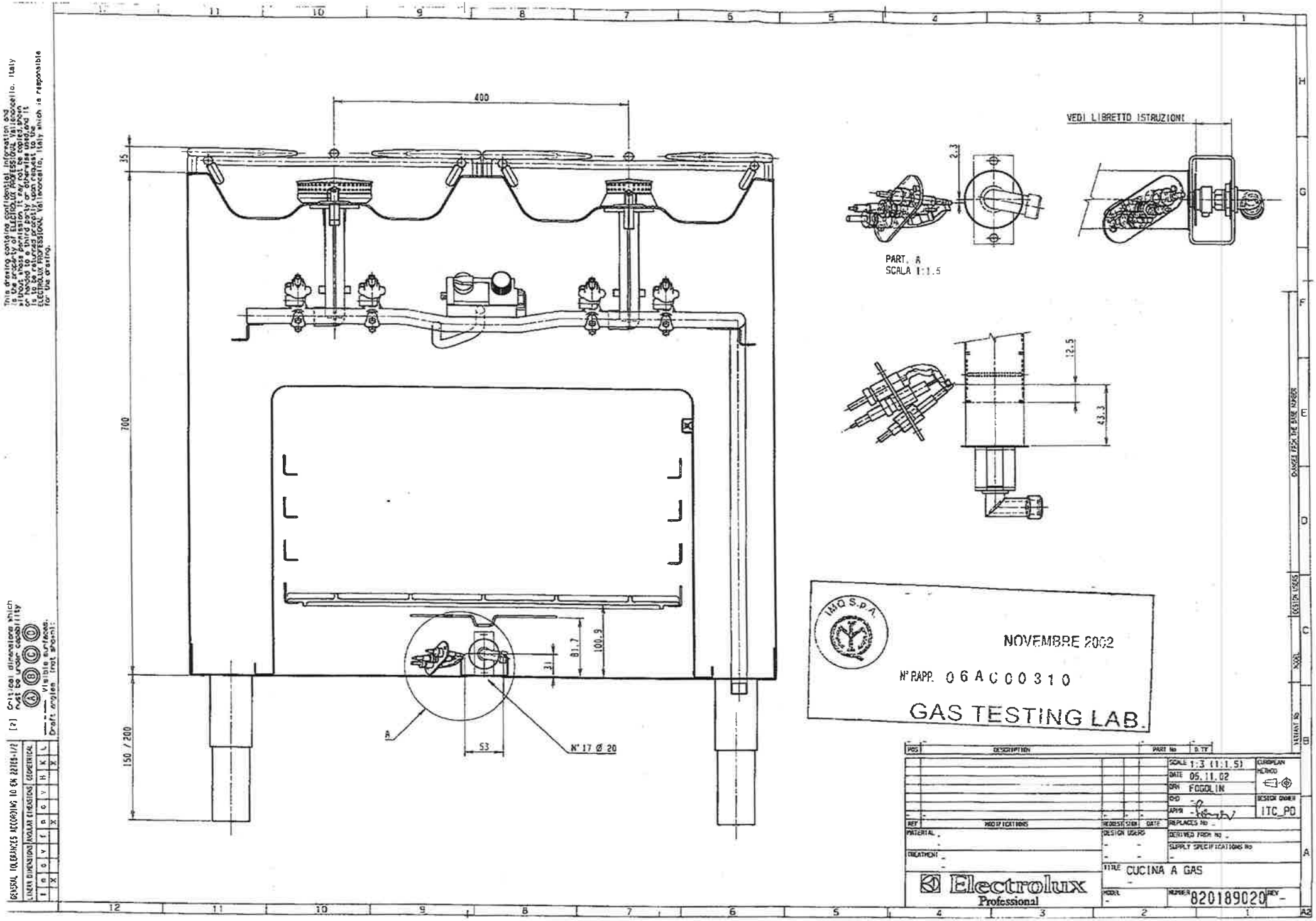

This drawing contains confidential information and is the property of ELECTROLUX PROFESSIONAL Vallenoncello, Italy without whose permission it may not be copied, shown or handed to a third party or otherwise used, and it is to be returned promptly upon request to the ELECTROLUX PROFESSIONAL Vallenoncello, Italy which is responsible for the drawing.

[2] Critical dimensions which must be under capability

Visible surfaces. Draft angles (not shown):

GENERAL TOLERANCES ACCORDING TO EN 22768-1/2

LINEAR DIMENSIONS				ANGULAR DIMENSIONS				GEOMETRICAL		
f	m	c	v	f	m	c	v	H	K	L
X				X				X		

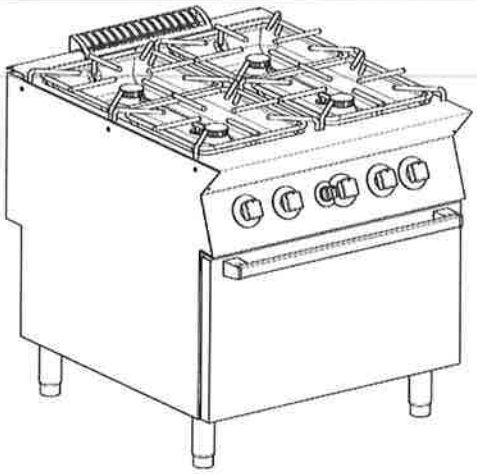

N9E

IT (*) - CUCINE Pag. 5
INSTALLAZIONE, USO E MANUTENZIONE
APPENDICE: Tabella B - Pressione gas/Dati tecnici ugelli Pag. 302
(* = lingua originale)

GB - IE - AU - COOKERS Page 28
INSTALLATION, OPERATION AND MAINTENANCE
APPENDIX: Table B - Gas pressure/nozzles technical data Page 302
(* = original language)

DE - HERDE Seite 51
INSTALLATION,GEBRAUCH UND WARTUNG
ANHANG: Tabelle B - Gasdruck/Technische Daten Düsen Seite 302
(* = Originalsprache)

FR - FORNEAUX Page 74
INSTALLATION, EMPLOI ET ENTRETIEN
APPENDICE : Tableau B - Pression du gaz/caractéristiques techniques des buses Page 302
(* = lingue originale)

ES - COCINAS Pág. 97
INSTALLACION, USO Y MANTENIMIENTO
APÉNDICE: Tabla B - Presión del gas/datos técnicos de las boquillas Pág. 302
(* = idioma original)

NL - FORNUIZEN Pag. 120
INSTRUCTIES VOOR INSTALLATIE, GEBRUIK EN ONDERHOUD
BIJLAGE: Tabel B - Gasdruk/technische gegevens mondstukken Pag. 302
(* = oorspronkelijke taal)

SE - SPIS Sidan 143
INSTALLATION, BRUG OG VEDLIGEHOLDELSE
BILAGA: Tabell B - Gastryck / Tekniska data dysor Sidan 302
(* = originalsprk)

DK - KOMFURER Side 166
INSTRUKTIONER FÖR INSTALLATION OCH BRUK
APPENDIKS: Tabel B - Gastryk/tekniske specifikationer for dyser Side 302
(* = originalsprog)

PT - COZINHA Pàg. 189
INSTRUCÇOES PARA A INSTALAÇÃO E USO
APÊNDICE: Tabela B - Pressão do gás/dados técnicos dos bicos Pág. 302
(* = lingua de origem)

GR - ΚΟΥΖΙΝΕΣ Σελ. 212
ΤΕΧΝΙΚΑ ΧΑΡΑΚΤΗΡΙΣΤΙΚΑ ΚΑΙ ΠΙΝΑΚΕΣ ΜΠΕΚ
ΠΑΡΑΡΤΗΜΑ: Πίνακας Β - Πίεση αερίου/τεχνικά χαρακτηριστικά μπ Σελ. 302
(* = πρωτότυπη γλώσσα)

FI - LIEDET Sivu 235
ASENNUS, KÄYTTÖ JA HUOLTO
LIITE: Taulukko B - Kaasun paine/suuttimien tekniset tiedot Sivu 302
(* = alkuperäinen kieli)

NO - KOMFYRER Side 258
INSTALLASJON, BRUK OG VEDLIKEHOLD
VEDLEGG: Tabell B - Gasstrykk/Tekniske data dyser Side 302
(* = originalspråk)

KO - 조리기 페이지 281
설치, 작동, 유지보수
부록: 표 B - 가스 압력/노즐 기술 데이터 페이지 302
(* = 원어)

DOC. NO. 59589A002
EDITION 1 05 2015

I. IMMAGINI / IMAGES / BILDER / IMAGES / IMÁGENES / BEELDEN / BILDER / BILLEDER / IMAGENS / EIKONEΣ / KUVIA / BILDER / 이미지

1. UNIONE APPARECCHIATURE - COMBINING APPLIANCES - GERÄTEZUSAMMENSCHLUSS - UNION D'APPAREILS - UNIÓN DE VARIOS EQUIPOS - VERBINDING VAN APPARATEN - MONTERING AV FLERA APPARATER TILLSAMMANS - SAMLING AF APPARATER - UNIÃO DE APARELHOS - ΣΥΝΔΕΣΗ ΣΥΣΚΕΥΩΝ - LAITTEIDEN LIITTÄMINEN - SAMMENKOBLING AV APPARATER - 기기 결합

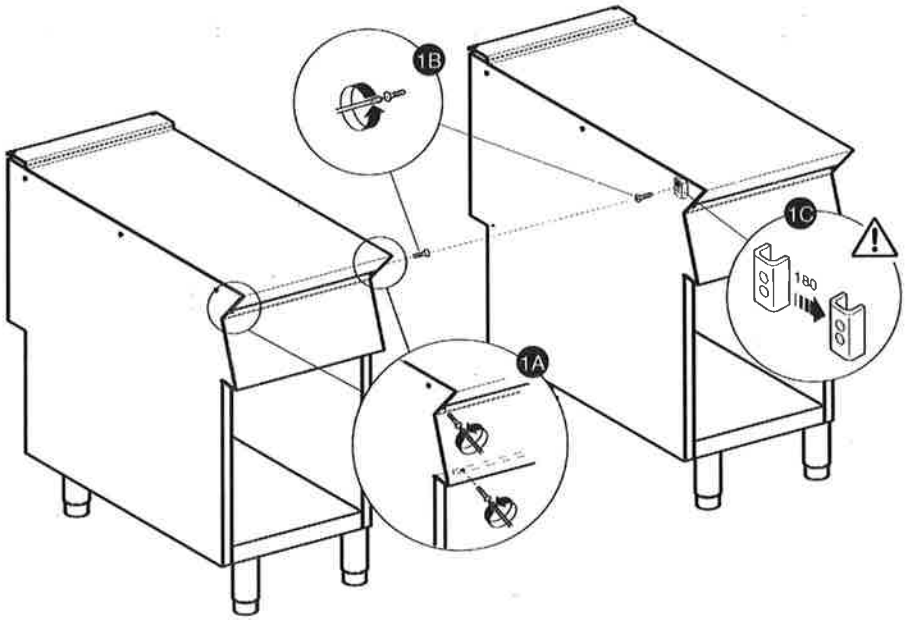

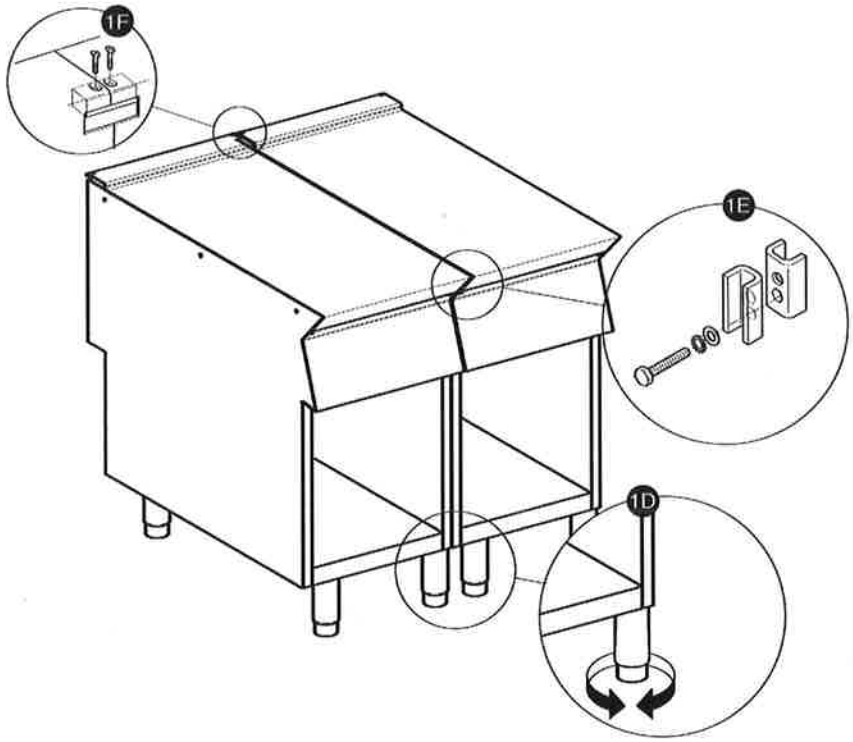

2.

PROSPETTO VALVOLE/RUBINETTI GAS - FIGURE GAS VALVE/TAPS - GASSCHAUBILD GASVENTILE/-HÄHNE - TABLEAU DES SOUPAPES/ ROBINETS DE GAZ - FIGURA VÁLVULAS/LLAVES DE GAS - OVERZICHT GASVENTIEL/KRAAN - OVERSIGT OVER VENTILER/GASHANER - ÖVERSIKT ÖVER VENTILER / GASKRANAR - PROSPETO DAS VÁLVULAS/TORNEIRAS DO GÁS - ΣΧΕΔΙΟ ΒΑΛΒΙΔΩΝ/ΡΟΥΜΠΙΝΕΤΩΝ ΑΕΡΙΟΥ - KAASUVENTTIILIEN/-HANOJEN KUVA - OVERSIKT OVER VENTILER/GASSKRANER / 가스 밸브/마개 그림

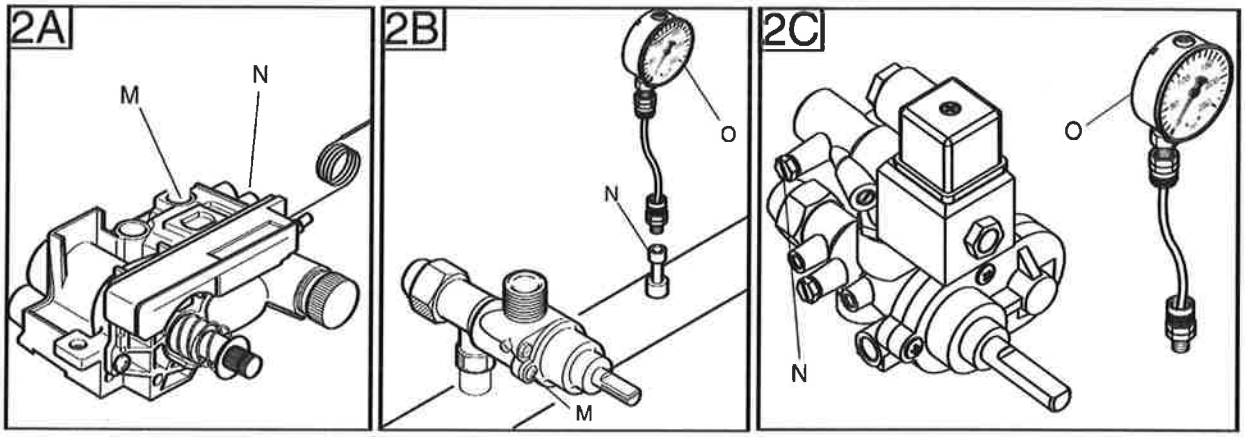

3.

PROSPETTO BRUCIATORI/PILOTI GAS - FIGURE GAS BURNERS/PILOTS - SCHAUBILD HAUPTBRENNER/PILOTBRENNER - TABLEAU DES BRÛLEURS/ VEILLEUSES GAZ - FIGURA QUEMADORES/PILOTOS GAS - OVERZICHT BRANDERS/WAAKVLAMBRANDERS GAS - OVERSIGT OVER BRÆNDERE/ TÆNDBLUS - ÖVERSIKT ÖVER GASBRÄNNARE/PILOTBRÅNNARE - PROSPETO DOS QUEIMADORES/PILOTOS DO GÁS - ΣΧΕΔΙΟ ΚΑΥΣΤΗΡΩΝ/ ΠΙΛΟΤΩΝ ΑΕΡΙΟΥ - KAASUPOLTTIMIEN/PILOTTILIEKKIEN KUVA - OVERSIKT OVER GASSBRENNERE/PILOTFLAMMER / 가스 버너/파일럿 그림

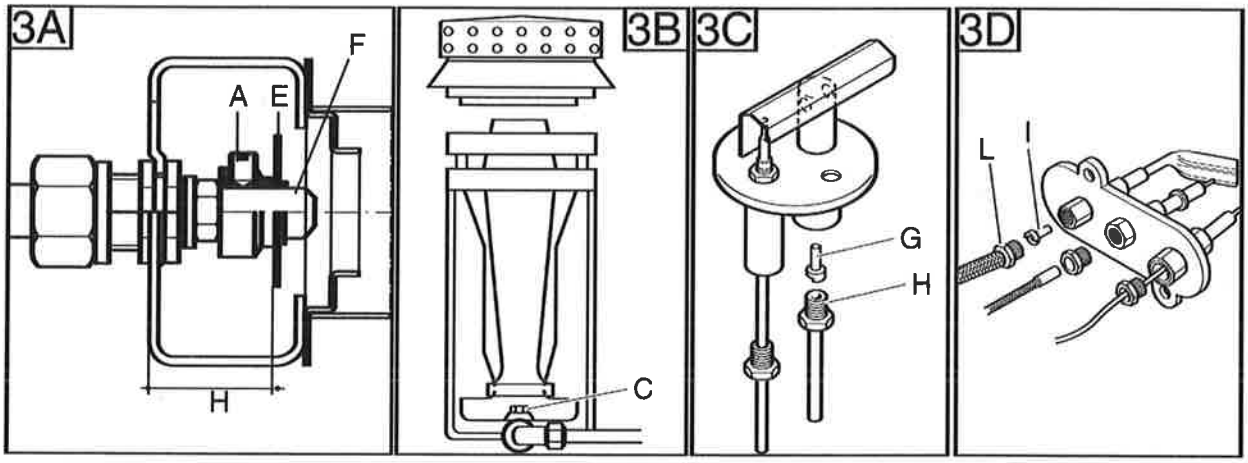

4.

PROSPETTO COLLEGAMENTI ELETTRICI - ELECTRICAL CONNECTIONS - AUFRISS ELEKTRISCHE ANSCHLÜSSE - TABLEAU DES BRAN-CHEMENTS ÉLECTRIQUES - VISTA DE LAS CONEXIONES ELÉCTRICAS - OVERZICHT ELEKTRISCHE AANSLUITINGEN - ÖVERSIKT ÖVER ELEKTRISKA ANSLUTNINGAR - OVERSIGT OVER ELEKTRISKE TILSLUTNINGER - PROSPECTO DE LIGAÇÕES ELÉCTRICAS - ΣΧΕΔΙΟ ΗΛΕΚΤΡΙΚΩΝ ΣΥΝΔΕΣΕΩΝ - SÄHKÖLIITÄNNÄT - OVERSIKT OVER ELEKTRISKE TILKOBLINGER - 전기 연결

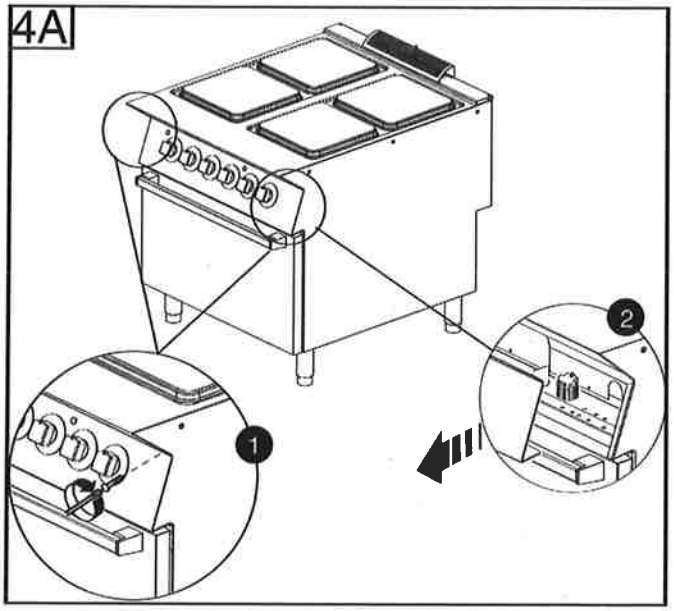

4. PROSPETTO COLLEGAMENTI ELETTRICI - ELECTRICAL CONNECTIONS - AUFRISS ELEKTRISCHE ANSCHLÜSSE - TABLEAU DES BRANCHEMENTS ÉLECTRIQUES - VISTA DE LAS CONEXIONES ELÉCTRICAS - OVERZICHT ELEKTRISCHE AANSLUITINGEN - ÖVERSIKT ÖVER ELEKTRISKA ANSLUTNINGAR - OVERSIGT OVER ELEKTRISKE TILSLUTNINGER - PROSPECTO DE LIGAÇÕES ELÉCTRICAS - ΣΧΕΔΙΟ ΗΛΕΚΤΡΙΚΩΝ ΣΥΝΔΕΣΕΩΝ - SÄHKÖLIITÄNNÄT - OVERSIKT OVER ELEKTRISKE TILKOBLINGER

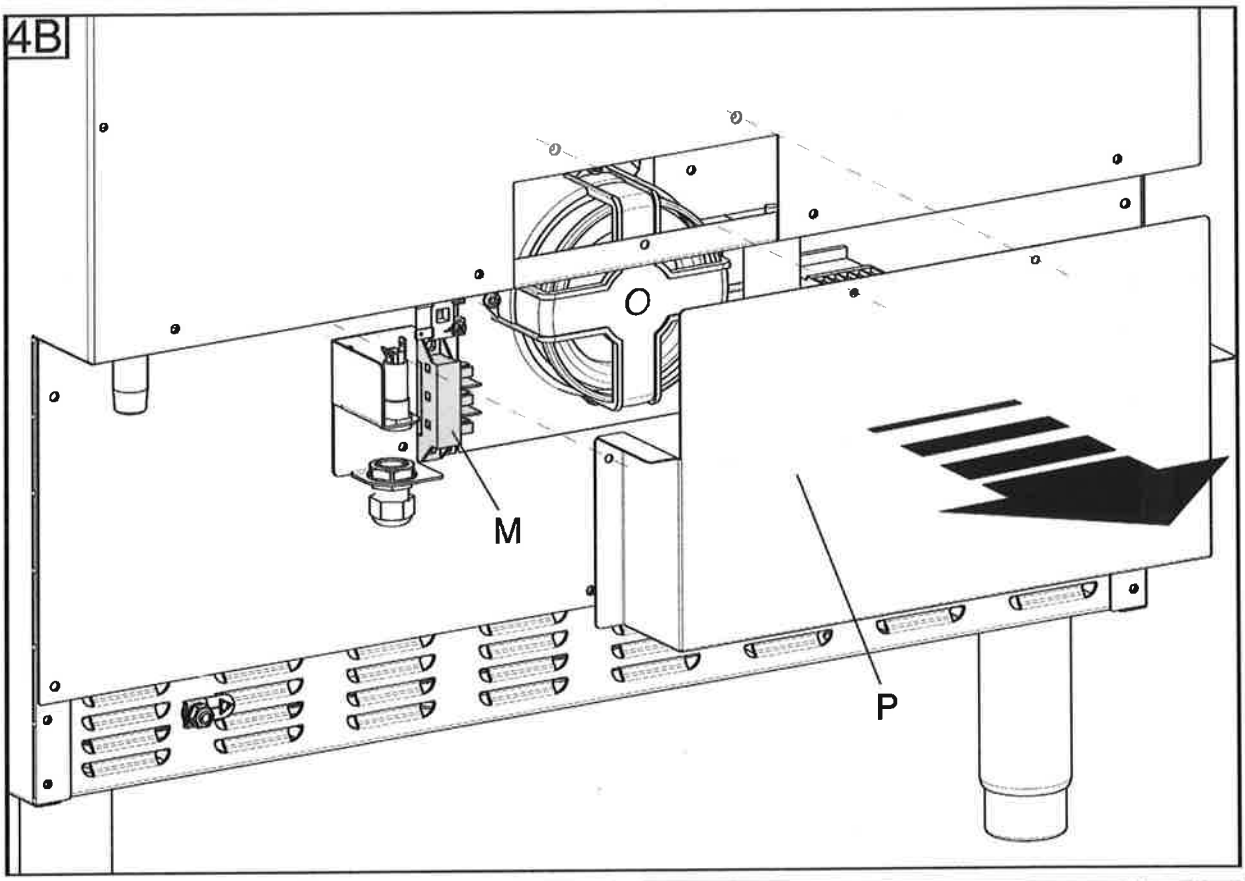

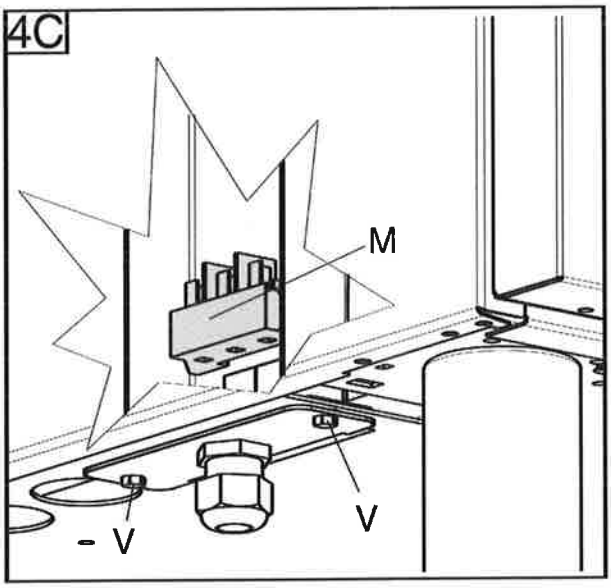

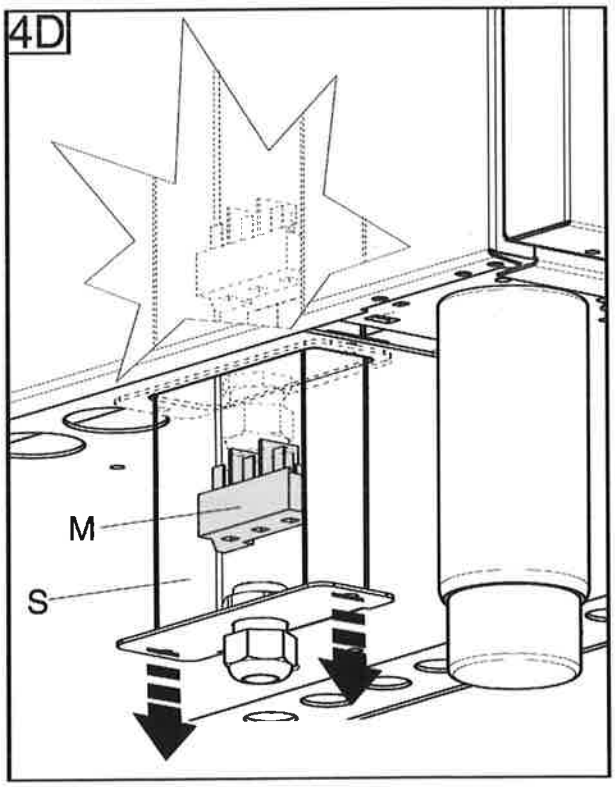

CONTENTS

I. IMAGES **2**

II. DATAPLATE and TECHNICAL DATA **29**

III. GENERAL INSTRUCTION **32**

IV. FOREWORD **34**

V. INSTALLATION **35**
1. GENERAL INFORMATION 35
2. TRANSPORT, HANDLING AND STORAGE 37
3. INSTALLATION AND ASSEMBLY 37
4. FUME EXHAUST 39
5. CONNECTIONS 39
6. SAFETY THERMOSTAT 41
7. BEFORE COMPLETING INSTALLATION OPERATIONS 41
8. HANDRAIL 42

VI. INSTRUCTIONS FOR OPERATOR FOR NORMAL MACHINE USE **42**
1. COOKTOP 42
2. STATIC OVEN USE 43
3. FAN OVEN USE 44

VII. CLEANING AND MAINTENANCE **45**
1. GENERAL SAFETY RULES 45
2. NORMAL MACHINE USE 46
3. MACHINE CLEANING AND MAINTENANCE 47
4. MACHINE DISPOSAL 50
5. ENCLOSED DOCUMENTATION 50

II. DATAPLATE AND TECHNICAL DATA

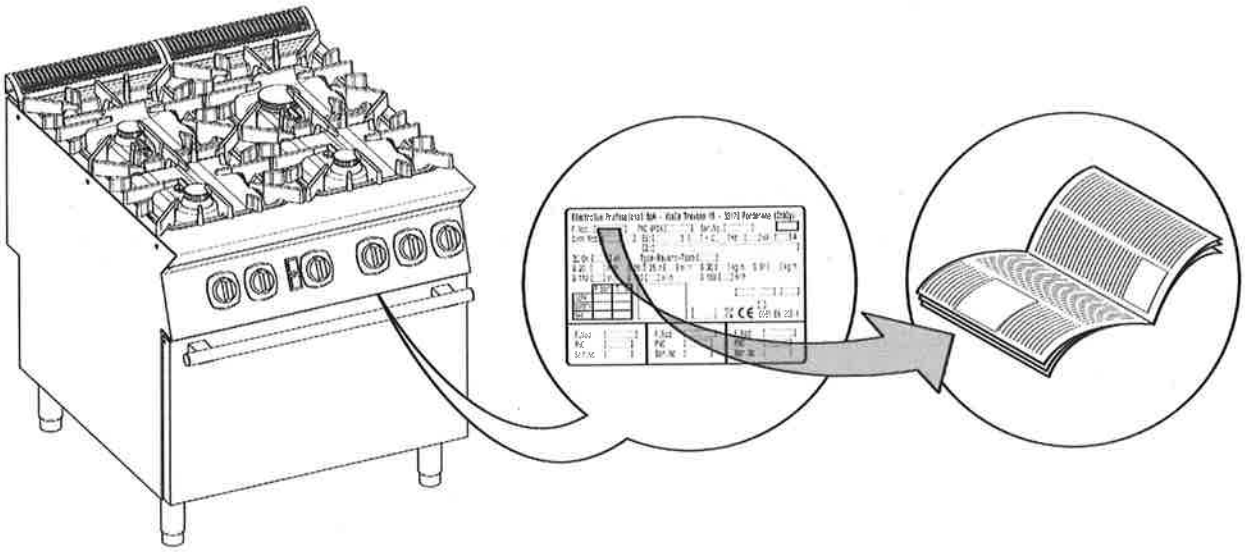

ATTENTION
This manual contains instructions relevant to various appliances. See the dataplate located under the control panel to identify the appliance (see fig. above).

TABLE A - Gas/electrical appliance technical data

MODELS / TECHNICAL DATA													
Power supply voltage	V	-	-	-	-	-	-	-	-	-	-	-	-
Electrical power absorbed	kW	-	-	-	-	-	-	-	-	-	-	-	-
Phases	No.	-	-	-	-	-	-	-	-	-	-	-	-
Frequency	Hz	-	-	-	-	-	-	-	-	-	-	-	-
Connection ISO 7/1 - BSP connection(*)	Ø	1/2"	1/2"	1/2"	1/2"	1/2"	1/2"	1/2"	1/2"	1/2"	1/2"	1/2"	1/2"
Cooktop burners	No.	2	2	2	4	4	4	4	6	6	6	4	4
Cooktop nominal heat output	kW	12	20	16	28	40	24	28	44	60	48	24	28
Type of construction		A1	A1	A1	A1	A1	A1	A1	A1	A1	A1	A1	A1
Oven type	-	-	-	-	-	-	-	-	-	-	-	Gas	Gas
Oven max. heat output	kW	-	-	-	-	-	-	-	-	-	-	8,5	8,5
Oven min. heat output	kW	-	-	-	-	-	-	-	-	-	-	-	-
Nominal heat output	kW	12	20	16	28	40	24	28	44	60	48	32,5	36,5

ALIMENTATION

MODELS / TECHNICAL DATA													
Power supply voltage	V	-	-	-	-	-	-	230	230	230	400	400	230
Electrical power absorbed	kW	-	-	-	-	-	-	0,25	0,25	0,25	6	6	6
Phases	No.	-	-	-	-	-	-	1	1	1	3N	3N	3
Frequency	Hz	-	-	-	-	-	-	50	50	50	50/60	50/60	50/60
Connection ISO 7/1 - BSP connection(*)	Ø	1/2"	1/2"	1/2"	1/2"	1/2"	1/2"	1/2"	1/2"	1/2"	1/2"	1/2"	1/2"
Cooktop burners	No.	6	6	6	6	6	6	4	4	4	4	4	4
Cooktop nominal heat output	kW	48	44	60	56	44	60	24	28	40	24	28	28
Type of construction		A1	A1	A1	A1	A1	A1	A1	A1	A1	A1	A1	A1
Oven type	-	Gas	Gas	Gas	Gas	Gas	Gas	Gas	Gas	Gas	Electric	Electric	Electric
Oven max. heat output	kW	8,5	8,5	8,5	17	12	12	10,5	10,5	10,5	-	-	-
Oven min. heat output	kW	-	-	-	-	-	-	-	-	-	-	-	-
Nominal heat output	kW	48,5	52,5	68,5	73	56	72	34,5	38,5	50,5	24	28	28

TABLE A - Electrical appliance technical data

MODELS / TECHNICAL DATA		9ECED2Q00 400mm	9ECED2Q0N 400mm	9ECMD2005 400mm	9ECMD2006 400mm	9ECEH4Q00 600mm	9ECEH4Q0N 600mm	9ECMH4005 600mm	9ECMH4006 600mm	9ECEH4QE0 600mm	9ECEH4QEN 600mm	9ECMH4025 600mm	9ECMH4026 600mm
Power supply voltage	V	380-400	230	400	440	380-400	230	400	440	380-400	230	400	440
Phases	No.	3N	3	3	3	3N	3	3	3	3N	3	3	3
Frequency	Hz	50/60	50/60	50/60	50/60	50/60	50/60	50/60	50/60	50/60	50/60	50/60	50/60
Cooktop hot-plates	No.	2	2	2	2	4	4	4	4	4	4	4	4
Cooktop hot-plate max. power	kW	8	8	8	8	16	16	16	16	16	16	16	16
Oven max. power	kW	-	-	-	-	-	-	-	-	6	6	6	6
Nominal max. power	kW	7,6 - 8	8	8	8	15 - 16	16	16	16	20 - 22	22	22	22
Power cable section	mm^2	2,5	4	2,5	1,5	4	10	4	2,5	6	16	6	6

TABLE A - Gas/electrical appliance technical data - Modelli con piano cottura senza pilota									
MODELS TECHNICAL DATA		+9GCGDTC00 400mm	+9GCGDTC0M 400mm	+9GCGHTC00 800mm	+9GCGHTC0M 800mm	+9GCGHTCGL 800mm	+9GCGHTCG0 800mm	+9GCGLTC00 1200mm	+9GCGLTC0M 1200mm
Power supply voltage	V	220-230	220-230	220-230	220-230	220-230	220-230	220-230	220-230
Electrical power absorbed	kW	0,01	0,01	0,01	0,01	0,01	0,01	0,01	0,01
Phases	No.	1N	1N	1N	1N	1N	1N	1N	1N
Frequency	Hz	50/60	50/60	50/60	50/60	50/60	50/60	50/60	50/60
Connection ISO 7/1 - BS/P connection(*)	Ø	1/2"	1/2"	1/2"	1/2"	1/2"	1/2"	1/2"	1/2"
Cooktop burners	No.	2	2	4	4	4	4	6	6
Cooktop nominal heat output	kW	12	20	28	40	24	28	44	60
Type of construction		A1	A1	A1	A1	A1	A1	A1	A1
Oven type	-	-	-	-	-	Gas	Gas	-	-
Oven max. heat output	kW	-	-	-	-	8,5	8,5	-	-
Oven min. heat output	kW	-	-	-	-	-	-	-	-
Nominal heat output	kW	12	20	28	40	32,5	36,5	44	60

(*)=AUSTRALIA

MODELS TECHNICAL DATA		+9GCGHTCGM 800mm	+9GCGLTC10 1200mm	+9GCGLTC1M 1200mm	+9GCGLTCL0 1200mm	+9GCGLTCLM 1200mm	+9GCGHTCVL 800mm	+9GCGHTCV0 800mm	9GCGHTCVM 800mm	+9GCGHTSE0 800mm
Power supply voltage	V	220-230	220-230	220-230	220-230	220-230	220-230	220-230	220-230	380-400
Electrical power absorbed	kW	0,01	0,01	0,01	0,01	0,01	0,2	0,2	0,2	8
Phases	No.	1N	1N	1N	1N	1N	1N	1N	1N	3N
Frequency	Hz	50/60	50/60	50/60	50/60	50/60	50/60	50/60	50/60	50/60
Connection ISO 7/1 - BS/P connection(*)	Ø	1/2"	1/2"	1/2"	1/2"	1/2"	1/2"	1/2"	1/2"	1/2"
Cooktop burners	No.	4	6	6	6	6	4	4	4	4
Cooktop nominal heat output	kW	40	44	60	44	60	24	28	40	28
Type of construction		A1	A1	A1	A1	A1	A1	A1	A1	A1
Oven type	-	Gas	Gas	Gas	Gas	Gas	Gas	Gas	Gas	Elettrico
Oven max. heat output	kW	8,5	8,5	8,5	12	12	10,5	10,5	10,5	-
Oven min. heat output	kW	-	-	-	-	-	-	-	-	-
Nominal heat output	kW	48,5	52,5	68,5	56	72	34,5	38,5	50,5	28

A reproduction of the marking or dataplate on the machine is given below:

GAS

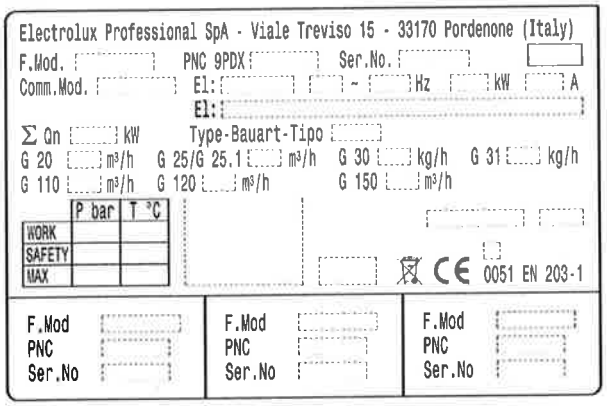

EL.

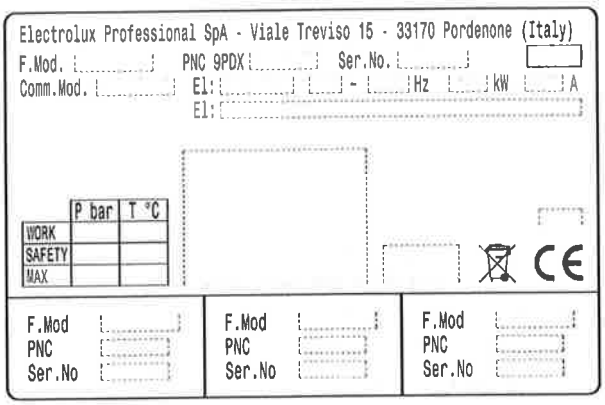

The meaning of the various information given on it is listed below:

F.Mod. ..... factory description of product
Comm.Model ..... commercial description
PNC ..... production number code
Ser.No ..... serial number
El: ..... power supply voltage+phase
Hz: ..... power supply frequency
kW: ..... max. power input
A ..... current absorption
Power unit El.: ..... power
I ..... dust and water protection rating
CE ..... CE marking
AB ..... gas safety certificate number
N ..... certification group
0051 ..... notified body
EN 203-1 ..... EU standard
L ..... Logo INQ/GS
Cat ..... Gas Category
Pmbar ..... Gas pressure

Electrolux Professional SPA
Viale Treviso, 15
33170 Pordenone
(Italy) Manufacturer

When installing the appliance, make sure the electrical connection is carried out in compliance with that specified on the dataplate.

III. GENERAL INSTRUCTION

- Carefully read the instruction handbook before using the appliance.
- After installation keep the instruction handbook for future consultation.

- FIRE HAZARD - Keep the area around the appliance clear and free from combustible materials. Do not keep flammable materials in the vicinity of the appliance.

- Install the appliance in a well-ventilated place to avoid the creation of dangerous mixtures of unburnt gases in the same room

- Air recirculation must take into account the air necessary for combustion, 2 $m^3/h/kW$ of gas power, and also the "well-being" of persons working in the kitchen.

- Inadequate ventilation causes asphyxia. Do not obstruct the ventilation system in the place where this appliance is installed. Do not obstruct the vents or ducts of this or other appliances.

- Place emergency telephone numbers in a visible position.

- Installation and maintenance must only be carried out by qualified personnel authorised by the manufacturer. For assistance, contact an authorised technical centre. Demand original spare parts.

- This appliance is designed for cooking food. It is intended for industrial use. Any use different from that indicated is improper.

- This appliance must not be used by minors and adults with limited physical, sensory or mental capabilities or without adequate experience and knowledge regarding its use.

- Personnel using the appliance must be trained and instructed regarding the risks involved.

- Do not leave the appliance unattended when operating.

- Turn the appliance off in case of fault or poor operation.

- Do not use products (even if diluted) containing chlorine (sodium hypochlorite, hydrochloric or muriatic acid, etc.) to clean the appliance or the floor under it. Do not use metal tools to clean steel parts (wire brushes or Scotch Brite type scouring pads).

- Do not allow oil or grease to come into contact with plastic parts.

- Do not allow dirt, fat, food or other residuals to form deposits on the appliance.

- Do not clean the appliance with direct jets of water.

- Do not spray water or use steam to clean the equipment.

- **The weighted sound pressure level emitted A does not exceed 70 dB (A).**
- **This instruction booklet is available in digital format by contacting the dealer or customer care.**
- **Install a safety circuit breaker ahead of the appliance. The contact opening distance and max. leakage current must comply with the regulations in force.**
- **The appliance must be earthed; it must be included in an equipotential node by means of the screw located under the appliance frame at the back right hand side. The screw is marked with the symbol ⏚.**
- **It is advisable to have the appliance inspected by an authorised person at least every 12 months. For this purpose, it is advisable to stipulate a servicing contract.**
- **The symbol given on the product indicates that it should not be considered domestic waste, but must be correctly disposed of in order to prevent any negative consequences for the environment and the health of persons. For further information regarding the recycling of this product, contact the product agent or local dealer, the after-sales service or the local body responsible for waste disposal.**

Failure to observe the above indications may compromise the safety of the appliance and will render the guarantee null. Failure to observe the above invalidates the warranty.

IV. FOREWORD

The installation, use and maintenance Manual (hereinafter Manual) provides the user with information necessary for correct and safe use of the machine (hereinafter "machine" or "appliance"). The following must not be considered a long and exacting list of warnings, but rather a set of instructions suitable for improving machine performance in every respect and, above all, preventing injury to persons and animals and damage to property due to improper operating procedures. All persons involved in machine transport, installation, commissioning, use and maintenance, repair and disassembly must consult and carefully read this manual before carrying out the various operations, in order to avoid wrong and improper actions that could compromise the machine's integrity or endanger persons. Make sure to periodically inform the appliance user regarding the safety regulations. It is also important to instruct and update personnel authorised to operate on the machine, regarding its use and maintenance. The manual must be available to operators and carefully kept in the place where the machine is used, so that it is always at hand for consultation in case of doubts or whenever required. If, after reading this manual, there are still doubts regarding machine use, do not hesitate to contact the Manufacturer or the authorised after-sales service centre, to receive prompt and precise assistance for better operation and maximum efficiency of the machine. During all stages of machine use, always respect the current regulations on safety, work hygiene and environmental protection. It is the user's responsibility to make sure the machine is started and operated only in optimum conditions of safety for persons, animals and property. **The manufacturer declines any liability for operations carried out on the appliance without respecting the instructions given in this manual. No part of this manual may be reproduced.**

V. INSTALLATION

1. GENERAL INFORMATION

- **AUSTRALIA**: this appliance shall be installed only by authorised persons and in accordance with the manufacturer's installation instructions, local gas fitting regulations,- municipal building codes, electrical wiring regulations, local water supply regulations, AS5601-gas installation, health authorites and any other statutory regulations.

1.1. INTRODUCTION

Given below is some basic information regarding the machine's intended use, its testing, and a description of the symbols used (that identify the type of warning), the definitions of terms used in the manual and useful information for the appliance user.

1.2. INTENDED USE AND RESTRICTIONS

Install the appliance in compliance with the current regulations and laws regarding installation of electric and gas appliances.

ATTENTION: The machine is not suitable for installation outdoors and/or in places exposed to atmospheric agents (rain, direct sunlight, etc.).

The manufacturer declines any liability for improper use of the product.

1.3. TESTING AND INSPECTION

Our appliances are designed and optimised, with laboratory testing, in order to obtain high performance and efficiency. The product is shipped ready for use. Passing of the tests (visual inspection - electrical/gas test - functional test) is guaranteed and certified by the specific enclosures.

1.4. DEFINITIONS

Listed below are the definitions of the main terms used in the manual. Carefully read them before using the manual.

Operator
machine installation, adjustment, use, maintenance, cleaning, repair and transport personnel.

Manufacturer
Electrolux Professional SPA or any other service centre authorised by Electrolux Professional SPA.

Operator for normal machine use
an operator who has been informed and trained regarding the tasks and hazards involved in normal machine use.

Technical assistance or specialised technician
an operator instructed/trained by the Manufacturer and who, based on his professional and specific training, experience and knowledge of the accident-prevention regulations, is able to appraise the operations to be carried out on the machine and recognise and prevent any risks. His professionalism covers the mechanical, electrotechnical and electronics fields.

Danger
source of possible injury or harm to health.

Hazardous situation
any situation where an operator is exposed to one or more hazards.

Risk
a combination of probabilities and risks of injury or harm to health in a hazardous situation.

Protection devices
safety measures consisting of the use of specific technical means (guards and safety devices) for protecting operators against risks.

Guard
an element of a machine used in a specific way to provide protection by means of a physical barrier.

Safety device
a device (other than a guard) that eliminates or reduces the risk; it can be used alone or in combination with a guard.

Customer
the person who purchased the machine and/or who manages and uses it (e.g. company, entrepreneur, firm).

Electrocution
an accidental discharge of electric current on a human body.

1.5. TYPOGRAPHICAL CONVENTIONS

For best use of the manual, and therefore the machine, it is advisable to have good knowledge of the terms and typographical conventions used in the documentation. The following symbols are used in the manual to indicate and identify the various types of hazards:

ATTENTION!
RISK FOR THE HEALTH AND SAFETY OF OPERATORS.

ATTENTION!
DANGER OF ELECTROCUTION - DANGEROUS VOLTAGE.

ATTENTION!
RISK OF DAMAGE TO THE MACHINE.

Words further explaining the type of hazard are placed next to the symbols in the text. The warnings are intended to guarantee the safety of personnel and prevent damage to the machine or the product being worked. The drawings and diagrams given in the manual are not in scale. They supplement the written information with an outline, but are not intended to be a detailed representation of the machine supplied. The numerical values given on the machine installation diagrams refer to measurements expressed in mm.

ATTENTION!
Do not remove, tamper with or make the machine "CE" marking illegible.

ATTENTION!
Refer to the data given on the machine "CE" marking for relations with the Manufacturer (e.g. when ordering spare parts, etc.).

ATTENTION!
When scrapping the machine, the "CE" marking must be destroyed.

1.6. APPLIANCE IDENTIFICATION

This manual contains instructions relevant to various appliances.
See the appliance dataplate located under the control panel to identify the appliance product code.

1.7. COPYRIGHT

This manual is intended solely for consultation by the operator and can only be given to third parties with the permission of Electrolux Professional SPA.

1.8. RESPONSIBILITY

The Manufacturer declines any liability for damage and malfunctioning caused by:

- non-compliance with the instructions contained in this manual;
- repairs not carried out in a workmanlike fashion, and replacements with parts different from those specified in the spare parts catalogue (the fitting and use of non-original spare parts and accessories can negatively affect machine operation and invalidates the warranty);
- operations by non-specialised technicians;
- unauthorised modifications or operations;
- inadequate maintenance;
- improper machine use;
- unforeseeable extraordinary events;
- use of the machine by uninformed and untrained personnel;
- non-application of the current provisions in the country of use, concerning safety, hygiene and health in the workplace.

The Manufacturer declines any liability for damage caused by arbitrary modifications and conversions carried out by the user or the Customer. The employer, workplace manager or service technician are responsible for identifying and choosing adequate and suitable personal protection equipment to be worn by operators, in compliance with regulations in force in the country of use.
Electrolux Professional SPA declines any liability for any inaccuracies contained in the manual, if due to printing or translation errors.
Any supplements to the installation, use and maintenance manual the Customer receives from the Manufacturer will form an integral part of the manual and therefore must be kept together with it.

1.9. PERSONAL PROTECTION EQUIPMENT

Given below is a summary table of the Personal Protection Equipment (PPE) to be used during the various stages of the machine's service life.

Stage	Protective garments	Safety footwear	Gloves	Glasses	Safety helmets
Transport		■			
Handling		■			
Unpacking		■			
Assembly		■			
Normal use	■	■			
Adjustments		■			
Routine cleaning		■			
Extraordinary cleaning		■			
Maintenance		■			
Dismantling		■			
Scrapping		■			

Key:
■ PPE REQUIRED
PPE AVAILABLE OR TO BE USED IF NECESSARY
PPE NOT REQUIRED

During **Normal use** , gloves protect hands from contact with hot food or hot parts of the appliance.

1.10. KEEPING THE MANUAL

The manual must be carefully kept for the entire life of the machine, until scrapping.
The manual must stay with the machine in case of transfer, sale, hire, granting of use or leasing.

1.11. RECIPIENTS OF THE MANUAL

This manual is intended for:

- the carrier and handling personnel;
- installation and commissioning personnel;
- the employer of machine users and the workplace manager;
- operators for normal machine use;
- specialised technicians - after-sales service.

2. TRANSPORT, HANDLING AND STORAGE

2.1. INTRODUCTION

Transport (i.e. transfer of the machine from one place to another) and handling (i.e. transfer inside workplaces) must occur with the use of special and adequate means.

ATTENTION!
Given their size, the machines can be stacked on top of each other during transport, handling and storage by complying with that specified on the slip placed on the packing;

The machine must only be transported, handled and stored by qualified personnel, who must:

- have specific technical training and experience in the use of lifting systems;
- have knowledge of the safety regulations and applicable laws in the relevant sector;
- have knowledge of the general safety rules;
- ensure the use of personal protection equipment suitable for the type of operation carried out;
- be able to recognise and avoid any possible hazard.

2.2. TRANSPORT: INSTRUCTIONS FOR THE CARRIER

ATTENTION!
Do not stand under suspended loads during loading/unloading operations. Unauthorised personnel must not enter the work area.

ATTENTION!
The machine's weight alone is not sufficient to keep it steady. The transported load can shift:
- when braking;
- when accelerating;
- in corners;
- on rough roads.

2.3. HANDLING

Arrange a suitable area with flat floor for machine unloading and storage operations.

2.4. PROCEDURES FOR HANDLING OPERATIONS

For correct and safe lifting operations:

- use the type of equipment most suitable for characteristics and capacity (e.g. electric pallet truck or lift truck);
- cover sharp edges;

Before lifting:

- send all operators to a safe position and prevent persons from entering the handling area;
- make sure the load is stable;
- make sure no material can fall during lifting. Manoeuvre vertically in order to avoid impacts;
- handle the machine, keeping it at minimum height from the ground.

ATTENTION!
For machine lifting, do not use movable or weak parts such as: casings, electrical raceways, pneumatic parts, etc.

2.5. TRANSLATION

The operator must:

- have a general view of the path to be followed;
- stop the manoeuvre in case of hazardous situations.

ATTENTION!
Do not push or pull the appliance to move it, as it may tip over.

2.6. PLACING THE LOAD

Before placing the load, make sure the way is free and that the floor is flat and can take the load. Remove the appliance from the wooden pallet, move it to one side, then slide it onto the floor.

2.7. STORAGE

The machine and/or its parts must be stored and protected against damp, in a non-aggressive place free of vibrations and with room temperature between -10°C and 50°C. The place where the machine is stored must have a flat support surface in order to avoid any twisting of the machine or damage to the support feet.

ATTENTION!
Machine positioning, installation and disassembly must be carried out by a specialised technician.

ATTENTION!
Do not make modifications to the parts supplied with the machine. Any missing or faulty parts must be replaced with original parts.

WARNINGS

- Do not store or use gasoline or other flammable vapours, liquids or items in the vicinity of this or any other appliance.
- Do not spray aerosols in the vicinity of this appliance while it is in operation.
- Never check for leaks with an open flame.
- The appliance is not suitable for a marine environment.

3. INSTALLATION AND ASSEMBLY

To ensure correct operation of the appliance and maintain safe conditions during use, carefully follow the instructions given below in this section.

ATTENTION!
The operations described below must be carried out in compliance with the current safety regulations, regarding the equipment used and the operating procedures.

ATTENTION!
Before moving the appliance make sure the capacity of the lifting equipment used is suitable for its weight.

3.1. CUSTOMER'S RESPONSIBILITIES

The Customer must:

- prearrange a high-sensitivity manual-reset differential thermal-magnetic switch. For information regarding the electrical connection, refer to par. 5.2 "Electrical connection";
- check the flatness of the surface on which the machine is placed.
- prearrange a device lockable in the open position for the connection to the power supply.
- prearrange the connection to a suitable earthing system (par. 5.2.3)
- install a rapid gas shutoff valve ahead of each individual appliance. Install the valve in an easily accessed place.

3.2. MACHINE SPACE LIMITS

A suitable space must be left around the machine (for operations, maintenance, etc.). This space must be increased in case of use and/or transfer of other equipment and/or means or if exit routes are necessary inside the workplace.

3.3. POSITIONING

The installation diagram provided in this instruction manual gives the appliance overall dimensions and the position of connections (gas, electricity, water).

The appliance can be installed separately or combined with other appliances of the same range.

The appliances are not suitable for recess-mounting. Leave at least 10 cm between the appliance and side or rear walls.

Suitably insulate surfaces that are at distances less than that indicated. Maintain an adequate distance between the appliance and any combustible walls. Do not store or use flammable materials and liquids near the appliance.

Install the appliance, taking all the safety precautions required for this type of operation, also respecting the relevant fire-prevention instructions. If the machine is installed in places where there are corrosive substances (chlorine, etc.), it is advisable to go over all the stainless steel surfaces with a rag soaked in paraffin oil to create a protective film. The machine must be taken to the place of installation and the packing base removed only when being installed.

Arranging the machine:

- position the machine in the required place;
- adjust the height and levelling with the adjustment feet, also checking correct door closing

NOTE

PERMANENT CONNECTION: the device lockable in the open position must be accessible even after the appliance is installed in its place.

- wear protective gloves and unpack the machine, carrying out the following operations:
- cut the straps and remove the protective film, taking care not to scratch the surface if scissors or blades are used;
- remove the polystyrene corners and the vertical protection pieces. For appliances with stainless steel cabinet, remove the protective film very slowly without tearing it, to avoid leaving glue stuck to the surface. Should this happen, remove the traces of glue with a non-corrosive solvent, rinsing it off and drying thoroughly; it is advisable to go over all the stainless steel surfaces with a rag soaked in paraffin oil in order to create a protective film.

3.4. DISPOSAL OF PACKING

The packing must be disposed of in compliance with the current regulations in the country where the appliance is used. All the packing materials are environmentally friendly. They can be safely kept, recycled or burnt in an appropriate waste incineration plant. Recyclable plastic parts are marked as follows:

PE
polyethylene: outer wrapping, instruction booklet bag

PP
polypropylene: straps

PS
polystyrene foam: corner protectors

The parts in wood and cardboard can be disposed of, respecting the current regulations in the country where the machine is used.

3.5. FLOOR FIXING

To avoid accidental tipping of built-in half-module appliances installed separately, fix them to the floor. The instructions are enclosed with the corresponding accessory (F206210).

3.6. JOINING APPLIANCES

- (Fig.1A) Undo the 4 fixing screws and remove the control panels of the appliances.
- (Fig.1B) Remove the fixing screw nearest the control panel, from each side to be joined.
- (Fig.1D) Bring the appliances together and level them by turning the feet until the tops match.
- (Fig.1C) Turn one of the two plates inside the appliances 180º.
- (Fig.1E) From inside the control panel of the same appliance, join them at the front side, screwing one M5x40 Hex Head screw (supplied) on the opposite insert.
- (Fig.1F) From the rear of the appliances, insert the coupling plate (provided) in the side slots on the back panels. Secure the plate with two flathead M5 screws provided.

3.7. ASSEMBLY AND JOINING OF COUNTERTOP APPLIANCES ON BASE, OVEN, BRIDGE, CANTILEVER FRAME

Follow the instructions enclosed with the optional product chosen.

3.8. SEALING GAPS BETWEEN APPLIANCES

Follow the Instructions enclosed with the optional sealing paste pack.

4. FUME EXHAUST

- For Australia, ventilation must be in accordance with AS5601/AG 601 - Gas installations.
  The appliance should have adequate ventilation for complete combustion of gas, and kitchen exhaust hoods must comply with AS/NZS1668.1 and AS 1668.2.
- SUB CLAUSE 4.1 is not relevant for australian standard.

4.1. FUME EXHAUST FOR TYPE "A1" APPLIANCES

Position type "A1" appliances under an extraction hood to ensure removal of fumes and steam produced by cooking.

5. CONNECTIONS

Refer to the appliance dataplate for the product code.
See the installation diagrams for the position of connections on the appliance:

- GAS (ø1/2" M ISO 7/1)
- ELECTRICITY

5.1. GAS APPLIANCES

IMPORTANT! This appliance is arranged and tested to operate with G20 gas 20mbar; to convert it to another type of gas, follow the instructions in par. 5.1.6. of this section.

5.1.1. BEFORE CONNECTING

- Make sure the appliance is arranged for the type of gas to be used. Otherwise, carefully follow the instructions given in the section: "Gas appliance conversion / adjustment".
- Fit a rapid gas shutoff valve ahead of each appliance. Install the valve in an easily accessed place.

- Clean the pipes to remove any dust, dirt or foreign matter which could block the supply.
- The gas supply line must ensure the gas flow necessary for full operation of all the appliances connected to the system. A supply line with insufficient flow will affect correct operation of the appliances connected to it.

ATTENTION! Incorrect levelling of the appliance can affect combustion and cause malfunctioning.

5.1.2. CONNECTION

- Before connecting the appliance to the gas supply, remove the plastic protection cover from the gas connection on the appliance.
- The appliance is arranged for connection on the bottom right side; countertop models can be connected to the gas supply using the rear connection, after unscrewing the metal closing plug and screwing it tightly onto the front connection.
- After installation, use soapy water to check connections for leaks.
- The gas connection is male 1/2" BSP

5.1.3. SUPPLY PRESSURE CHECK (fig. 2A, 2B and 2C)

Make sure the appliance is suitable for the type of gas available, according to that given on the dataplate (otherwise, follow the instructions given in the section "Conversion to another type of gas"). The supply pressure must be measured with the appliance operating, using a pressure gauge (min. 0.1 mbar).

- Remove the control panel.
- Remove retaining screw "N" from the pressure point and connect the manometer "O".
- Compare the value read on the pressure gauge with that given in Table B (see handbook Appendix)
- If the pressure gauge gives a pressure outside the range of values in Table A, do not switch the appliance on. Consult the gas company.

5.1.4. GAS PRESSURE REGULATOR

- The section of the gas supply line must be sufficient to ensure the gas flow necessary for full operation of all the appliances connected to the system.

If the gas pressure is higher than that specified or is difficult to regulate (not stable), install a gas pressure regulator (accessory code 927225) in an easily accessed position ahead of the appliance.
The pressure regulator should preferably be fitted horizontally, to ensure the right outlet pressure:

- "**1**" connection side gas from mains.
- "**2**" pressure regulator;
- "**3**" connection side gas towards the appliance;

The arrow on the regulator ( ) indicates the gas flow direction.

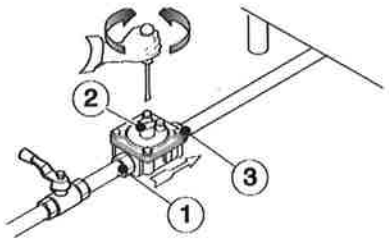

AUSTRALIA: the gas pressure regulator supplied with the appliance must be fitted to the appliance inlet. Adjust the test point pressure with all hob burners operating at maximum setting as follow:
- 1.0 KPa for Natural gas
- 2.65 KPa for Propane gas

NOTE! These models are designed and certified for use with natural or propane gas. For natural gas, the pressure regulator on the header is set to 8" w.c. (20mbar).

5.1.5. PRIMARY AIR CHECK (fig. 3A)

The primary air is correctly adjusted when the flame does not "float" with the burner cold and there is no flareback with the burner hot.

- Undo screw "A" and position aerator "E" at distance "H" given in Table B; retighten screw "A" and seal with paint.

5.1.6. CONVERSION TO ANOTHER TYPE OF GAS

Table B "technical data/gas nozzles" gives the type of nozzles to be used when replacing those fitted by the manufacturer (the number is stamped on the nozzle body). At the end of the procedure, carry out the following check-list:

Check	Ok
• burner nozzle/s replacement	
• correct adjustment of primary air supply to burner/s	
• pilot nozzle/s replacement	
• minimum flame screw/s replacement	
• correct adjustment pilot/s if necessary	
• correct adjustment of supply pressure (see technical data/gas nozzles table)	
• apply sticker (supplied) with data of new gas type used	

5.1.6.1 MAIN BURNER NOZZLE REPLACEMENT (cooktop, fig.3B)

- Unscrew nozzle "C" and replace it with one suitable for the type of gas (Table B) complying with that given in the following table.
- The nozzle diameter is given in hundredths of mm on the nozzle body.
- Retighten nozzle "C".

5.1.6.2 PILOT BURNER NOZZLE REPLACEMENT (cooktop, fig. 3C)

- Undo screw coupling "H" and replace nozzle "G" with the one suitable for the type of gas (Table B).
- The nozzle identification number is given on nozzle body.
- Retighten screw coupling "H".

5.1.6.3 MINIMUM FLAME SCREW REPLACEMENT (cooktop, fig.2B)

- Unscrew minimum flame screw "M" from the valve and replace it with one suitable for the type of gas (screw down fully) (Table B).

5.1.6.4 MAIN BURNER NOZZLE REPLACEMENT (oven, static/fan - fig. 3A)

- Open the door and remove the floor of the oven.
- Unscrew nozzle "F" (Table B).
- Remove the nozzle and aerator.
- Replace nozzle "F" with the corresponding nozzle for the selected gas, according to that given in the table B.
- The nozzle diameter is given in hundredths of mm on the nozzle body.
- Insert nozzle "F" in aerator "E", then fit the two assembled components in their position, screwing the nozzle down tightly.

5.1.6.5 PILOT BURNER NOZZLE REPLACEMENT (oven, static/fan - fig.3D)

- Open the door and remove the floor of the oven.
- Undo screw coupling "L" and replace nozzle "I" with one suitable for the type of gas (Table B).
- The nozzle diameter is given in hundredths of mm on the nozzle body.
- Retighten coupling "L".

5.1.6.6 MINIMUM FLAME SCREW REPLACEMENT (large oven 12kW, fig.2A)

- Unscrew min. flame screw "M" from the valve and replace it with one suitable for the type of gas (screw down fully) (Table B).

5.1.6.7 REPLACING THE ADJUSTMENT SPRING OF THE PRESSURE REGULATOR (AUSTRALIA)

- Replace the spring of the pressure regulator with one suitable for the gas pressure type given in table B (see handbook Appendix) as follows:
- Remove the seal cap, seal cap gasket, adjusting screw and the spring.
- Insert the new spring and replace the adjusting screw.
- Connect a pressure gauge to the appliance's test point pressure (fig. 2A/2B/2C).
- Ignite the appliance's burners so to have the maximum gas consumption.
- Regulate the adjustment screw until the pressure gauge shows the working pressure value (section 5.1.4 Gas pressure regulator).
- Replace the seal cap and gasket and screw tightly closed.
- Remove the pressure gauge and close the test point pressure.
- Prior to operation, test the gas pressure regulator for leaks.

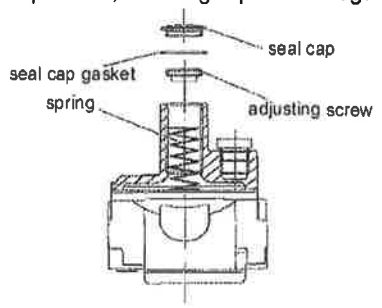

5.2. ELECTRIC APPLIANCES (oven or cooktop, fig. 4A)

5.2.1. ELECTRICAL CONNECTION (Table C).

IMPORTANT! Before connecting, make sure the mains voltage and frequency match that given on the dataplate.

ATTENTION!
Work on the electrical systems must only be carried out by a qualified electrician.

Before carrying out any cleaning or maintenance operation, disconnect the appliance from the power supply and carefully unplug it.

IMPORTANT! Before connecting **make sure**:

- the mains voltage and frequency match that given on the dataplate and that there is an efficient earth contact.
- the system power supply is arranged and able to take the actual current absorption and that it is correctly executed according to the regulations in force in the country of use;
- a differential thermal-magnetic switch suitable for the input specified on the dataplate, with contact gap enabling complete disconnection in category III overvoltage conditions and complying with the regulations in force, is installed between the power cable and the electric line. For the correct size of the switch, refer to the absorbed current specified on the appliance dataplate.
- the mains voltage and frequency match that given on the dataplate.

5.2.2. TO ACCESS THE TERMINAL BLOCK

5.2.2.1 COUNTERTOP/MONOBLOCK MODELS (Fig. 4A - Table A).

- Remove the appliance control panel by undoing the fixing screws (fig. 4A 1-2).
- Connect the power cable to the terminal block according to the wiring diagram provided with the appliance.
- Secure the power cable with the cable gland.

5.2.2.2 MONOBLOCK MODELS WITH COOKTOP WITHOUT PILOT FLAME (Fig. 4C-4D - Table C).

- Remove the two screws "V" and slide the box "S" down to access the terminal block "M".
- Connect the power cable to the terminal block according to the wiring diagram provided with the appliance.
- Secure the power cable with the cable gland.
- Reposition the box and secure it with the screws "V".

5.2.2.3 MODELS WITH FAN OVEN (Fig. 4B - Table A-C).

- Remove the appliance rear panel "P" by undoing the fixing screws.
- Connect the power cable to the terminal block according to the wiring diagram provided with the appliance.
- Secure the power cable with the cable gland.

IMPORTANT! The manufacturer declines any liability if the safety regulations are not respected.

- After making the connection, with the machine working check that the power supply does not fluctuate by ±10% the rated voltage.
- Installation requires the inclusion of a device lockable in the "open" position during maintenance

5.3. POWER CABLE

Unless otherwise specified, our appliances are not equipped with a power cable. The installer must use a flexible cable having characteristics at least equivalent to H07RN-F rubber-insulated type. Protect the cable section outside the appliance with a metal or rigid plastic pipe.

If the power cable is damaged, it must be replaced by the after-sales service or in any case by qualified personnel, in order prevent any risk.

The manufacturer declines any liability for damage or injury resulting from breach of the above rules or non-compliance with the electrical safety regulations in force in the country where the machine is used.

6. SAFETY THERMOSTAT

Some of our appliance models use a safety thermostat that cuts in automatically when temperatures exceed a set value, shutting off the gas supply (gas appliances) or the electricity (electric appliances).

6.1. RESET

- Wait until the appliance has cooled: a suitable temperature for resetting is approx. 90°C.
- Press the red button on the safety thermostat body.

IMPORTANT! If resetting requires the removal of a protection part (e.g. control panel) this must be done by a specialised technician. Tampering with the safety thermostat invalidates the warranty.

7. BEFORE COMPLETING THE INSTALLATION OPERATIONS

Use soapy water to check all gas connections for leaks. DO NOT use a naked flame to check for gas leaks. Light all the burners separately and also together, to check correct operation of the gas valves, rings and lighting. For each burner, adjust the flame regulator to the lowest setting, individually and together; after completing the operations, the installer must instruct the user on the correct method of use. If the appliance does not work properly after carrying out all the checks, contact the local after-sales service centre.

8. HANDRAIL

Marine appliances are equipped with a front handrail that can be fitted by drilling the top according to the following diagram:

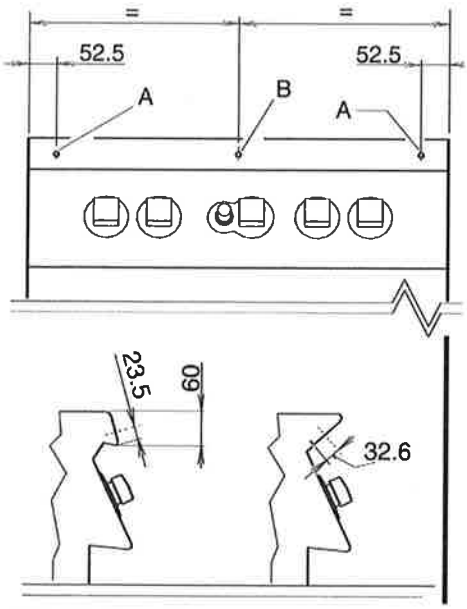

8.1. HANDRAIL INSTALLATION

8.1.1. PREPARATION FOR INSTALLING ACCESSORY

- Prepare the appliance by drilling the edge of the top (make ø6 holes) at points "A". For 1200mm and 1600mm appliances also drill at point "B".

8.1.2. ZANUSSI/OEM HANDRAIL

- Screw supports "S" on handrail "C" and insert them at the holes prepared.
- Insert reinforcement plate "R" and fix the supports "S" with the nuts and washer.

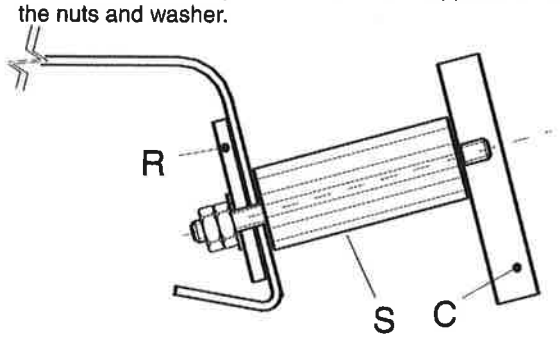

8.1.3. ELECTROLUX HANDRAIL

- Fix supports "A" to the edge of the top at the prepared holes, with screw "B", plate "C" and respective nuts and washer, as shown in the figure.
- Fit handrail "D" on support "A" and secure it with screw "E", as shown in the figure.

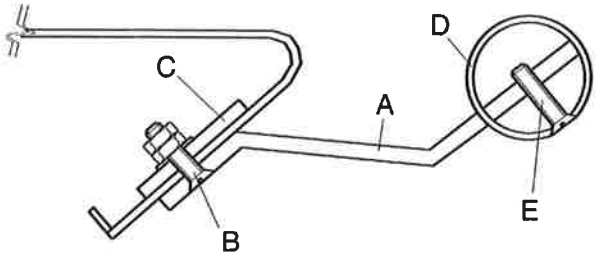

VI. INSTRUCTIONS FOR OPERATOR FOR NORMAL MACHINE USE

1. COOKTOP USE

1.1. GAS MODELS

1.1.1. LIGHTING COOKTOP BURNERS

The gas valve control knob has 4 positions:

- ● off
- ✱ pilot ignition
- max. flame.
- min. flame.

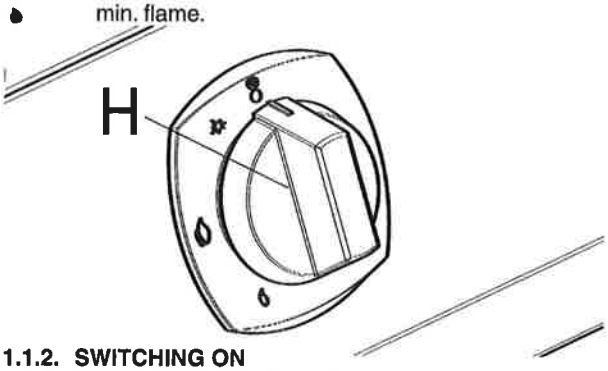

1.1.2. SWITCHING ON

- Press and turn knob "H" to "pilot ignition". Press the knob down and bring a flame to the pilot to light it. Hold the knob down for about 20 seconds; when released, the pilot flame must stay alight. If it does not, repeat the operation.
- To light the main burner, turn the knob from "pilot ignition" to "max. flame".
- For the minimum flame, turn the knob from "max. flame" to "min. flame".

1.1.3. SWITCHING OFF

- Turn the knob from "max. flame" or "min. flame" to "pilot ignition".
- To shut off the pilot, press the knob partially and turn it to "off".

NOTE: Incorrect positioning of the flame spreader can create problems in combustion.

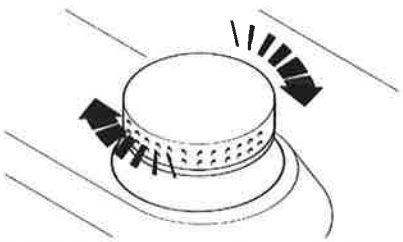

- Before lighting the burners make sure the flame spreaders are turned to the stop position.

ATTENTION: Do not use radiant plates or grills on the ø100 mm burners.

1.2. GAS MODELS WITH IGNITER WITHOUT PILOT FLAME

1.2.1. LIGHTING COOKTOP BURNERS

The gas valve control knob has 3 positions:

- ● off
- max. flame
- min. flame

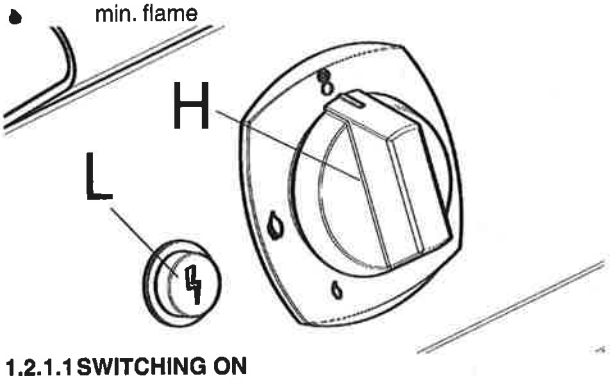

1.2.1.1 SWITCHING ON

- Press and turn knob "H" to "max. flame".
- Press the knob down and at the same time press igniter button "L". Hold the knob down for about 10 seconds; when released, the flame must remain lit. If not, check for residual moisture on the ignition plugs, dry if necessary and repeat the operation. If the problem occurs again, use a lighter.
- For minimum, turn the knob from "max. flame" to "min. flame".

1.2.1.2 SWITCHING OFF

- Turn the knob from "max. flame" or "min. flame" to "off"

1.3. ELECTRIC MODELS

- Equipped with rapid heating electric hot-plates each of 4kW power.
- To ensure long life of the hot-plates, observe the following:
  - use flat-bottomed pots;
  - do not leave the hot-plates switched on without pots or with empty pots.
  - do not spill cold liquids on the hot-plate when hot.

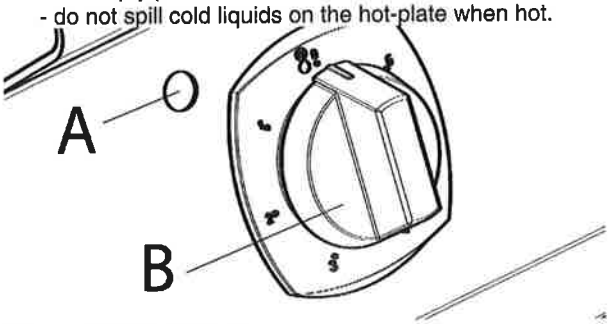

1.3.1. SWITCHING ON

- Turn on the main switch located ahead of the appliance.
- Turn control knob "B" of the required hot-plate to one of the six available positions marked on the control panel, bearing in mind that "1" corresponds to minimum power and "6" corresponds to maximum power.
  Lighting up of green indicator "A" signals that the corresponding hot-plate is on.
- To adjust hot-plate heat, it is advisable to turn the knobs firstly to "6"; on reaching the maximum cooking or boiling value, turn the knob to a lower setting.

1.3.2. SWITCHING OFF

Turn the control knobs to "0".

2. STATIC OVEN USE

2.1. GAS MODELS

The thermostatic valve control knob has the following positions:

- ● off
- ✱ pilot ignition
- pilot.
- burner.

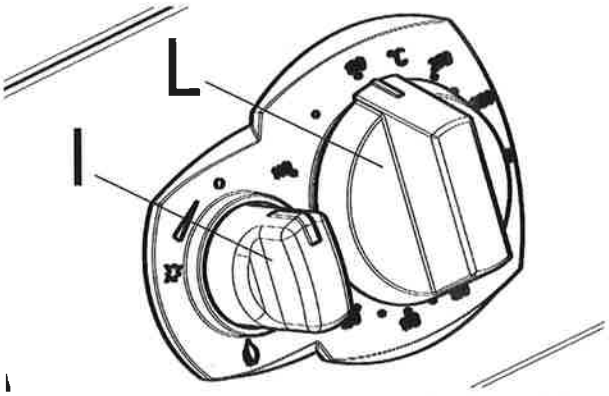

- Press knob "I" lightly and turn it a few degrees anticlockwise to release it.
- Press down fully and turn it to "pilot ignition"; a click will indicate sparking.
- Keep knob "I" pressed and turn it to "pilot", holding it in that position for about 15-20 seconds to allow the gas to reach the pilot burner (pilot ignition) and the thermocouple to heat.
- With the pilot lit, turn knob "I" from to "burner" to light the latter.
- At this point, knob "L" can be used to select the required temperature.

2.1.1. INTERLOCK

The oven gas valve has an interlock device which prevents immediate re-lighting (for about 40 seconds) of the oven in the event it is accidentally turned off. This ensures the escape of any gas accumulated inside the oven, and better safety.

2.1.2. SWITCHING OFF

- Turn knob "I" to "off", to turn off the main burner.
- To switch off the pilot burner, turn knob "I" to "off".

2.2. ELECTRIC MODELS

The heating elements are controlled by a 4-position selector knob "D", whereas the oven temperature is controlled by a thermostat "E".
Use the selector knob to choose the most suitable type of heating, activating the heating elements in an appropriate way:

- o off
- 1 appliance "On"
- upper and lower heating elements
- upper heating element
- lower heating element

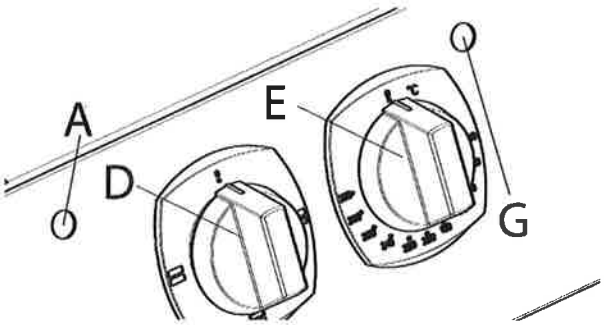

NOTE: The oven door must be closed for all types of cooking.

2.2.1. SWITCHING ON

Turn heating element control knob "D" to the required setting. Lighting up of green indicator "A" signals that the power is on. Turn thermostat knob "E" to the required cooking temperature (between 140 and 320°C). Lighting up of yellow indicator "G" signals that the heating elements are on; it goes off when the set temperature is reached.

2.2.2. SWITCHING OFF

Turn the control knobs to the off position "0". Turn off the electrical switch installed ahead of the appliance.

3. FAN OVEN USE

3.1. GAS MODELS

The thermostatic valve control knob has the following positions:

- ● off
- ✱ pilot ignition
- pilot.
- burner.

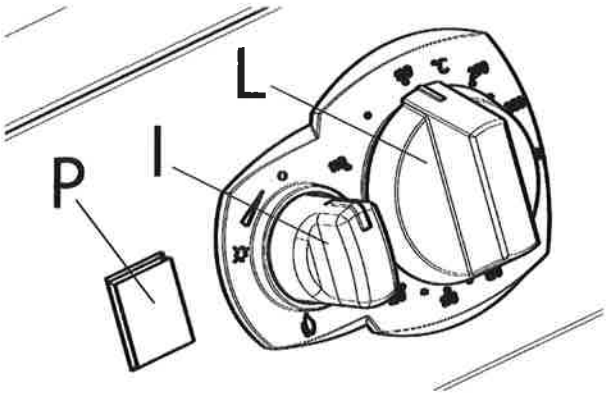

- Press knob "I" lightly and turn it a few degrees anticlockwise to release it.
- Press down fully and turn it to "pilot ignition"; a click will indicate sparking.
- Keep knob "I" pressed and turn it to "pilot", holding it in that position for about 15-20 seconds to allow the gas to reach the pilot burner (pilot ignition) and the thermocouple to heat.
- With the pilot lit, turn knob "I" from to "burner" to light the latter.
- At this point, knob "L" can be used to select the required temperature.

NOTE: Press button "P" to activate the oven fan

3.1.1. INTERLOCK

The oven gas valve has an interlock device which prevents immediate re-lighting (for about 40 seconds) of the oven in the event it is accidentally turned off. This ensures the escape of any gas accumulated inside the oven, and better safety.

3.1.2. SWITCHING OFF

- Turn knob "I" to "off", to turn off the main burner.
- To switch off the pilot burner, turn knob "I" to "off".

Electrolux

Date : 2016-05-17

MODEL IDENTITY DECLARATION

We hereby declare that the new models listed below have had no changes in the gas system and the same product tested in the lab represents the same gas system currently used.

DESCRIPTION	Electrolux Model	Zanussi Model	New Diamond Model
	Natural gas & Propane	Natural gas & Propane	Natural gas & Propane
2 burners gas boliling top	E9GCGD2C00	Z9GCGD2S00	A9GCGD2C00
4 burners gas boliling top	E9GCGH4C00	Z9GCGH4S00	A9GCGH4C00
4 burners gas range + gas oven	E9GCGHTCGA	Z9GCGHTCGA	A9GCGHTCGA
4 burners gas range + electric oven	E9GCGHTCEA	Z9GCGHTCEA	A9GCGHTCEA
6 burners gas boliling top	E9GCGL6C00	Z9GCGL6S00	A9GCGL6C00
4 burners gas range + gas oven + cupboard	E9GCGLTC1A	Z9GCGLTC1A	A9GCGLTC1A
8 burners gas range + 2 gas ovens	E9GCGP8CGA	Z9GCGP8SGA	A9GCGP8CGA
4 burners (10kW) gas range + gas oven	E9GCGHTCGB	Z9GCGHTCGB	A9GCGHTCGB
2 burners (10kW) gas boliling top	E9GCGD2C0M	Z9GCGD2S0M	A9GCGD2C0M
4 burners (10kW) gas boliling top	E9GCGH4C0M	Z9GCGH4S0M	A9GCGH4C0M
6 burners (10kW) gas boliling top	E9GCGL6C0M	Z9GCGL6S0M	A9GCGL6C0M
6 burn. (10kW) gas range + oven + cupboard	E9GCGLTC1B	Z9GCGLTC1B	A9GCGLTC1B
4 burners gas range + convection oven	E9GCGH4CV0	Z9GCGH4SV0	A9GCGH4CV0
4 burn. (10kW) gas range + convection oven	E9GCGH4CVM	Z9GCGH4SVM	A9GCGH4CVM

Gianmarco Vortali
Dev & App Laboratory
GR&D Hot Category

ELECTROLUX PROFESSIONAL SPA
REGISTERED OFFICE
SEDE LEGALE
VIALE TREVISO, 15
33170 PORDENONE (Italy)
www.electrolux.com/professional
REGISTRO A.E.E.
N. IT08020000000553
TELEPHONE/TEL.
+39 0434.3801
TELEFAX
+39 0434.380201
R.E.A.
N. 4837
FISCAL NUMBER
REGISTER OF COMPANIES
COD. FISC. E REGISTRO
IMPRESE DI PN NUM.
00072220932
VAT CODE
P. IVA E CODICE ISO
IT 00072220932
PAID UP SHARE CAPITAL
CAPITALE SOCIALE
EURO 7,998,000 I.V.
COMPANY WITH A SOLE SHAREHOLDER
SOCIETÀ CON SOCIO UNICO
MANAGEMENT AND COORDINATION EX ART. 2497 CIVIL CODE
AB ELECTROLUX (PUBL.) - STOCKHOLM (SWEDEN)
DIREZIONE E COORDINAMENTO EX ART. 2497 CODICE CIVILE
AB ELECTROLUX (PUBL.) - STOCCOLMA (SVEZIA)

Electrolux

Date : 2016-05-17

MODEL IDENTITY DECLARATION

We hereby declare that the models listed below have the following total gas rate.

DESCRIPTION	New Diamond Model Natural gas & Propane	TOTAL GAS RATE NATURAL GAS [MJ/h]	TOTAL GAS RATE PROPANE [MJ/h]
2 burners gas boliling top	A9GCGD2C00	49	46
4 burners gas boliling top	A9GCGH4C00	109.5	104
4 burners gas range + gas oven	A9GCGHTCGA	140.1	134.6
4 burners gas range + electric oven	A9GCGHTCEA	109.5	104
6 burners gas boliling top	A9GCGL6C00	170	162
4 burners gas range + gas oven + cupboard	A9GCGLTC1A	200.6	192.6
8 burners gas range + 2 gas ovens	A9GCGP8CGA	249.6	238.6
4 burners (10kW) gas range + gas oven	A9GCGHTCGB	174.6	170.6
2 burners (10kW) gas boliling top	A9GCGD2C0M	72	70
4 burners (10kW) gas boliling top	A9GCGH4C0M	144	140
6 burners (10kW) gas boliling top	A9GCGL6C0M	216	210
6 burn. (10kW) gas range + oven + cupboard	A9GCGLTC1B	246.6	240.6
4 burners gas range + convection oven	A9GCGH4CV0	147.3	140.8
4 burn. (10kW) gas range + convection oven	A9GCGH4CVM	181.8	176.8

Gianmarco Vortali
Dev & App Laboratory
GR&D Hot Category

ELECTROLUX PROFESSIONAL SPA
REGISTERED OFFICE
SEDE LEGALE
VIALE TREVISO, 15
33170 PORDENONE (Italy)
www.electrolux.com/professional
REGISTRO A.E.E.
N. IT08020000000553
TELEPHONE/TEL.
+39 0434.3801
TELEFAX
+39 0434.380201
R.E.A.
N. 4207
FISCAL NUMBER
REGISTER OF COMPANIES
COD. FISC. E REGISTRO IMPRESE DI PN NUM.
00072220932
VAT CODE
P. IVA E CODICE ISO
IT 00072220932
PAID UP SHARE CAPITAL
CAPITALE SOCIALE
EURO 7.998.000 I.V.
COMPANY WITH A SOLE SHAREHOLDER
SOCIETÀ CON SOCIO UNICO
MANAGEMENT AND COORDINATION EX ART. 2497 CIVIL CODE
AB ELECTROLUX (PUBL.) - STOCKHOLM (SWEDEN)
DIREZIONE E COORDINAMENTO EX ART. 2497 CODICE CIVILE
AB ELECTROLUX (PUBL.) - STOCCOLMA (SVEZIA)