05/2018

Mod: E9/BMA4

Production code: BBEBMA498

Diamond
catering equipment

EBMA498

1 BOWL GN 4/3, ELECTRIC ON OPEN STAND

SEE MORE TECHNICAL DATA:

External dimensions - WxDxH (cm)	40x90x85
Tank capacity (lt-GN)	GN 4/3
Total power (kW)	2,5

HIDE THE OTHER TECHNICAL DATA:

Tank dimensions - WxDxH (cm)	31x69x16
Electric elements (kW)	2,5
Supply (N)	230V 1N 50Hz
Weight (kg)	45
Volume (m3)	0,5
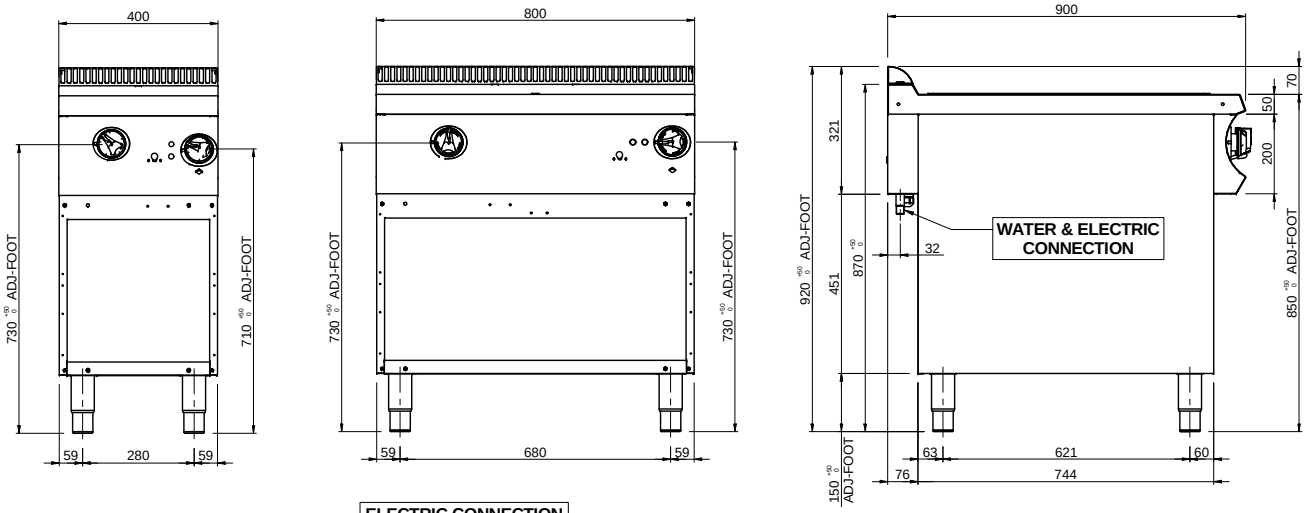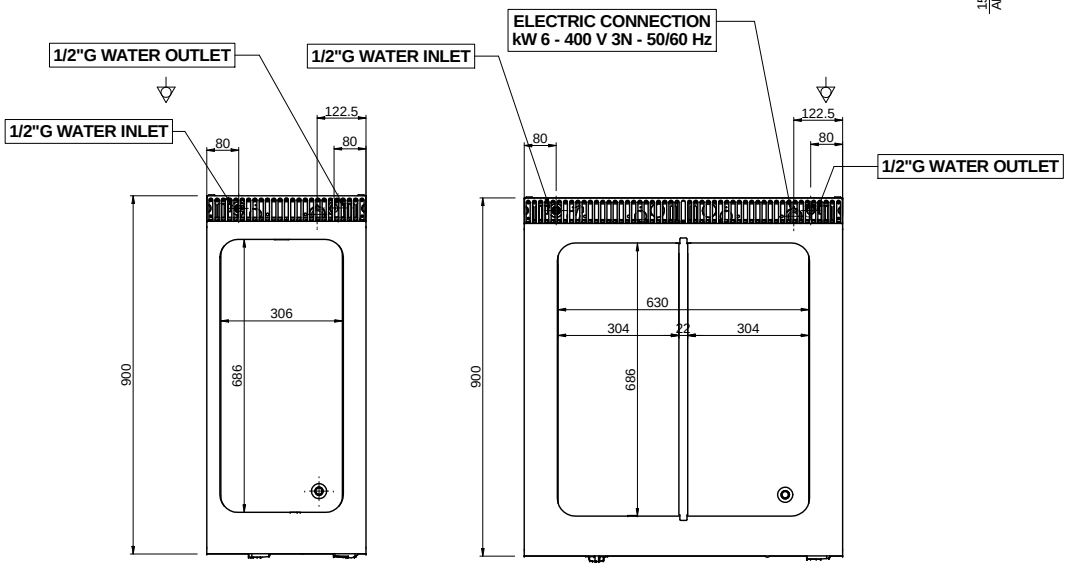
The worktop is in 2 mm AISI 304 stainless steel. The AISI 304 stainless steel tanks are moulded and continuous weld. Gastronorm 4/3 basin capacity for module 45 and 8/3 for module 90. Electric heating with armoured stainless steel elements, set on the external bottom of the tanks and controlled by a thermostat.